EP760
Hybrid Inverter

User Manual V2.0

Please Read This Manual Before Use And Follow Its Guidance.
Keep This Manual For Future Reference.

BLUETTI

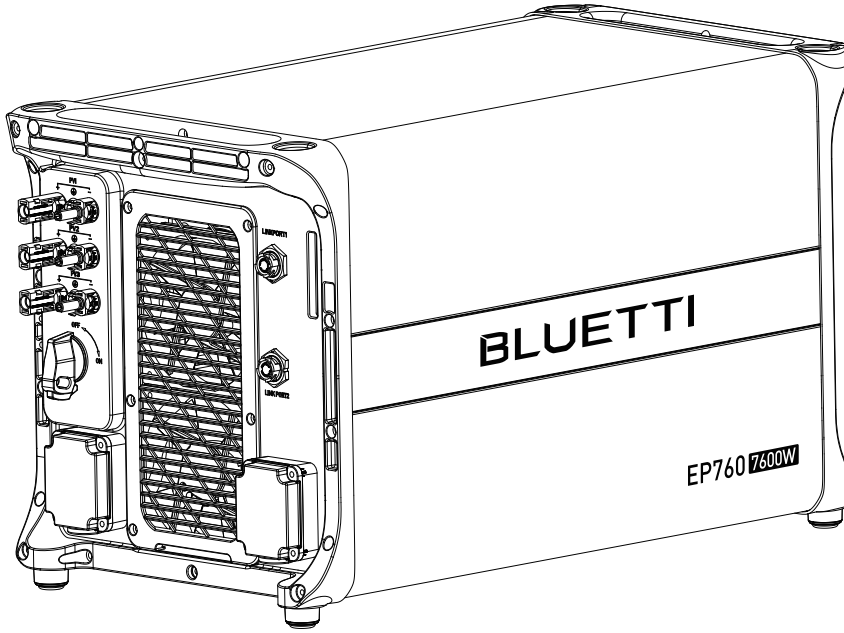

Thank You!

Thank you for making BLUETTI a part of your family.
From the very beginning, BLUETTI has tried to stay true to a sustainable future through green energy storage solutions for both indoor and outdoor use while delivering an exceptional eco-friendly experience for our homes and our world. That's why BLUETTI makes its presence in 100+ countries and is trusted by millions of customers across the globe.

Instruction

Copyright © 2023 Shenzhen PowerOak Newener Co., Ltd. All rights reserved.

No part of this document may be reproduced or transmitted in any form or by any means without the prior written consent of Shenzhen PowerOak Newener Co., Ltd.

Notice

BLUETTI's products, services, and features are subject to the agreed-upon terms and conditions during purchase. Please note that some products, services, or features described in this manual may not be available under your purchase contract. Unless otherwise specified in the contract, BLUETTI makes no representations or warranties of any kind, express or implied, with respect to the contents of this manual.

The contents of this manual are subject to change without notice. Please get the latest version from BLUETTI official website.

If you have any questions or concerns about this manual, please contact BLUETTI customer service.

Shenzhen PowerOak Newener Co., Ltd.

19F, Block A, Kaidaer Building,No. 168 Tongsha Road, Nanshan District, Shenzhen, Guangdong, China

About the Manual

Purpose

This user manual describes the installation, electrical connection, commissioning, maintenance and troubleshooting of EP760. Please read and understand all instructions in this manual before use.

Target Audience

- Installation, operation, and maintenance technicians
- Owners of EP760 Hybrid Inverter

Symbol Conventions

This manual uses the following symbols to highlight important information:

	Danger
	It indicates a hazardous situation which, if not avoided, will result in death or serious injury.
	Warning
	It indicates a hazardous situation which, if not avoided, could result in death or serious injury.
	Caution
	It indicates a hazardous situation which, if not avoided, could result in minor or moderate injury.
	Attention
	It indicates a potentially hazardous situation which, if not avoided, could cause substantial damage to property and the environment.
	Instruction
	It contains important additional information as well as useful tips for the safe, efficient, and hassle-free operation of the EP760 Hybrid Inverter

Contents

1 Safety Guideline ---- 06
2 EP760 ---- 14
2.1 Working mode ---- 14
2.2 Features ---- 16
2.3 Inverter Overview ---- 17
2.4 Inverter Interface ---- 18
2.5 LED Indicator ---- 21
2.6 Buzzer Alarm ---- 22
2.7 Inverter Cables ---- 22
2.8 Generation Limit Control ---- 23
3 IoT Controller ---- 27
3.1 Communication Principle ---- 27
3.2 IoT Controller Overview ---- 27
3.3 Safety Instructions ---- 27
3.4 Connection and Operations ---- 28
4 Inverter Installation ---- 30
4.1 Installation Procedure ---- 30
4.2 Installation Preparation ---- 31
4.3 Installation Requirements ---- 36
4.4 Stacking the EP760 ---- 38
4.5 IoT Controller Installation ---- 39
4.6 Electrical Connection ---- 41
4.7 RCD ---- 56
4.8 Earth Fault Alarm ---- 57
5 System Commissioning ---- 58
6 System Maintenance ---- 71
7 System Disposal ---- 72
8 Specifications ---- 72
9 Troubleshooting ---- 75
10 FAQs (Frequently Asked Questions) ---- 79

1. Safety Guideline

1.1 Safety Instructions

1.1.1. Disclaimer

Read this manual for instructions on the proper use and safety information for the unit.

Pay attention to the "Instruction", "Caution", "Warning" and "Danger" symbols in this manual, and follow the instructions carefully to avoid injury or damage.

The Safety Requirements provided herein are for illustrative purposes that include but are not limited to those listed in this manual. Actual operation shall comply with all applicable safety standards. If you have any questions, feel free to contact BLUETTI support or your local BLUETTI dealers.

To ensure a safe and reliable operation, it's crucial to carefully observe and adhere to the following conditions :

- Always operate or store the equipment in the conditions specified in this manual.
- The installation and ambient conditions must comply with the regulations in the relevant international, national or regional standards.
- Avoid unauthorized disassembly, equipment replacement, or modification of software codes.

BLUETTI shall not be liable for damages resulting from the following circumstances:

- Force majeure events such as earthquakes, fires, storms, floods, or mudslides.
- Damages caused by improper handling and installation that do not meet the requirements outlined in the manual.
- Damages resulting from inadequate storage conditions as specified in the manual.
- Hardware or data damage caused by customer negligence, improper operation, or intentional actions.
- System damage caused by third parties or customers.
- Adjustments, changes, or removal of labels in violation of this manual.
- Usage of the product in devices with high-performance UPS requirements, including but not limited to data servers, workstations, medical equipment, and others.

1.1.2 General Safety

	Danger
!	Follow these guidelines for proper operation.

- Do not install, use and maintain the unit in adverse weather conditions such as lightning, rain, snow, and strong breezes (including but not limited to handling and operating the unit, plugging and unplugging signal connections to outdoor facilities, working at height, outdoor installations, etc.).
- Always turn off the power source before starting any electrical work.
- Do not clean the equipment with water.
- Do not disassemble, modify, tamper with, or repair the equipment on your own.
- Regularly inspect the unit and its accessories for damage.
- Use a tester to check for the presence of dangerous voltage before touching any conductor or terminal.
- If the equipment's shell is cracked during transportation or use, do not use it and contact BLUETTI support or your local BLUETTI dealers.
- Use a dry powder fire extinguisher if the equipment catches fire.
- In case of fire, EVACUATE the building or affected area immediately, activate the closest FIRE ALARM system and CALL your local emergency phone number.
- Use genuine cables and accessories provided by BLUETTI.
- Keep the unit away from heat sources or high temperatures, and do not expose it to direct sunlight.
- Do not store the equipment with flammable liquids, gases, or explosive materials.
- Make sure the place where you are using the equipment is well-ventilated and spacious.
- Do not block or cover the openings of the equipment, as this may cause irreversible damage to it.
- Use the equipment for its intended purpose and avoid stacking objects on top of it during storage or use.
- Do not move the unit during operation as the vibrations and shocks associated with movement may cause damage to the internal hardware.

- Turn off the equipment IMMEDIATELY in case of malfunction, and contact the BLUETTI support team if this manual cannot explain the malfunction adequately to you.
- Do not place the equipment on unstable or inclined surfaces.

Keep away from children and pets.

Comply with applicable laws and regulations.

	Instruction
	• The transportation, wiring and maintenance shall comply with all applicable laws, regulations and standards. • User-provided materials and tools required shall meet the requirements specified in applicable laws, regulations and relevant standards.

1.1.3 Personnel Requirements

- The installation, commissioning, and maintenance should only be performed by trained professionals who follow proper safety precautions and operating practices.
- To operate BLUETTI equipment, professionals must possess the necessary qualifications and certifications required by local regulatory authorities for tasks like high-voltage operations, working at heights, and specialized equipment operations.

1.2. Installation Safety

	Danger
	• Avoid working with live electrical components. • Before installation, double check the equipment for any signs of damage or defects to minimize potential risks. • Make sure that the equipment and all associated switches are in the "OFF" position to prevent electric shock. • Do not touch any terminal while the equipment is running, as it may pose a risk of electric shock.

	Warning • The installation should only be performed by qualified professionals or trained personnel. • All cables should be securely connected and meet appropriate specifications. • Do not touch the equipment, as the shell may become hot when it's running.
	Attention Handle the equipment and accessories with care during loading, unloading and transportation.

1.2.1 General Requirements

- Before starting any work, turn off and isolate all electricity to the property at the main panel.
- Take measures to prevent the electricity from turning back on while working, such as a safety tag and lockout.
- Test the circuit's voltage before proceeding to verify that the course is off.
- After installing the equipment, remove the idle package materials from the site such as cartons, foam, plastic, nylon ties, etc.
- Keep people other than the installation technicians away from the EP760.
- When handling equipment and accessories, pack them in their original packaging or other materials to protect them from impact.
- Seal all the wiring ports with fireproof and water-proof materials to prevent possible electric shock or other risks.
- It's prohibited to alter, damage or cover the marking and nameplate of any part of the EP760.
- Check and make sure all safe guards, including screws and waterproof rings, are in place and properly tightened.
- Keep the EP760 firmly secured to the ground or other solid objects, such as a wall or mounting bracket.
- Use a non-abrasive cloth to clean the equipment and accessories. Do not use water or harsh chemicals.
- Please follow the instructions to install the EP760.

1.2.2 Anti-static Requirements

- Wear or use personal protective equipment (PPE) or clothing that is appropriate for the work; this may include items such as safety glasses or goggles, or a face shield (with safety glasses or goggles), hearing protection, dust mask, gloves, anti-static bracelet, safety boots or shoes, or rubber boots.
- If you use an anti-static bracelet for electrical connections, make sure the bracelet is properly grounded.

1.2.3 Drilling Requirements

When drilling holes in the wall or on the ground, the following safety measures should be considered.

- Wear goggles and protective gloves at all times.
- Shield and protect the equipment to prevent debris from falling into it and remove all debris after drilling.
- Drill holes on the unit are forbidden, as this may damage the equipment's electro-magnetic shielding performance. The metal shavings may cause short circuits on the circuit board.

1.3 Electrical Safety

1.3.1 General Requirements

- Make sure that all electrical connections comply with your local electrical standards.
- Before connecting an EP760 to your home grid, consult your national or regional electricity authority for guidance.
- User-prepared cables should adhere to local laws and regulations.
- When performing high-voltage operations, use insulated tools for safety.
- Wear anti-static gloves during work and avoid clothing that generates static electricity.

1.3.2 Grounding Requirements

- Always make the ground connection first and disconnect it last when installing or removing the equipment.
- Take care not to damage the grounding conductor.
- Before operating the equipment, always confirm that it is securely and reliably grounded.

1.3.3 Wiring Requirements

- Keep cables at least 30mm away from the heating devices or heat sources to prevent damage caused by excessive heat.

- Group cables of the same type together to minimize electromagnetic interference. Additionally, ensure that cables of different types should be laid at least 30mm apart without intertwining and crossing.
- Cables used in the PV grid-connected power generation system must be firmly connected, well insulated, and has proper specifications.
- Take necessary measures to protect cables when passing through pipes or holes.
- Safe Construction Practices:

  (a) All cable installations should be carried out in environments above 0℃ to maintain cable flexibility and integrity. Handle the cable with care, especially when working in low temperature environments.

  (b) If the cable has been stored below 0℃, allow it to acclimate to room temperature for a minimum of 24 hours before installation.

1.4 Maintenance Requirements

	Danger
!	The equipment generates high voltage during operation, which can cause electric shock leading to severe injury, property damage, or even death. Please strictly follow the safety instructions provided in the user manual and adhere to relevant electrical safety codes.

To ensure your safety while maintaining the EP760, please follow the following steps:
Step1: Disconnect the power grid.
Step2: Disconnect the battery and solar systems.
Step3: Wait at least 30 minutes until the equipment is discharged.

- Follow the anti-static requirements to prevent electric shock and other potential hazards.
- For any maintenance needs, please contact your local authorized service center.
- Place temporary warning signs or erect fences to prevent unauthorized access to the maintenance site.
- To ensure personal safety and proper equipment usage, establish a reliable grounding connection before use.
- Wear personal protective equipment (PPE) during operation. If there is a possibility of personal injury or equipment damage, stop operation immediately, and take appropriate protective measures.

- Use tools correctly to avoid injury or damage to equipment.
- Do not touch energized equipment.
- Do not clean the electrical components inside and outside the cabinet with water.
- Do not stand, lean on or sit on top of the equipment.
- Do not damage the equipment modules.

1.5 Transportation Requirements

All components of the EP760 leave the factory in optimum electrical and mechanical state. It's necessary to use original or appropriate packaging to ensure the product safety during transportation. When you receive the product, inspect for any kind of damage and note the damage on the delivery receipt. The shipping company will be responsible for any damage or loss of the product during transportation. If necessary, please contact us for further assistance.

1.6 Storage Requirements

- When not using the EP760 for extended periods of time, power it off and remove all electrical connections.
- Make sure the place where to store the EP760 is well ventilated and spacious.
- Do not store the EP760 with flammable liquids, gases, or explosive materials.
- You're strongly recommended to clean the surface frequently with a dry soft cloth.
- Keep away from children and pets.
- Do not stack anything on top of the equipment either in storage or in use.
- Avoid exposing the equipment to rain, humidity or direct sunlight.
- For details of storage temperature, please refer to chapter 10-Specifications.

1.7 Handling Requirements

Table 1-1 Recommended Number of People Based on the Weight of Product

Weight	Number of people
<18kg	1
18kg~32kg	2
32kg~55kg	3
>55kg	4 or a cart

1.8 Label Description

Table 1-2 Labels and Description

Label	Name	Description
	Discharge delay	There is still residual voltage after the equipment is powered off. Please wait at least 5 minutes until the equipment is discharged.
	Electrical shock warning	The EP760 generates high voltage during operation. The installation, commissioning, and maintenance should only be performed by qualified professionals or trained personnel.
	Warning	Be careful. Hazards may occur during operation.
	Read instruction	Please read the instruction carefully before operating the EP760.
	This side up	It must be transported, handled and stored in the correct orientation. The arrow always faces upwards.
	Weight	The inverter and battery packs are quite heavy and need to be carried by several people.

	Attention
	• The symbols on the box contain important information for safe operation. • The nameplate on the side of the box contains important parameter information related to the product.

2. EP760

EP760 is an energy storage photovoltaic grid-connected inverter that can handle photovoltaic input, grid-connected charging, and discharging. It is only compatibility with the B500 BESS and must work with it.

The inverter has not been tested to AS/NZS 4777.2:2020 for multiple phase inverter-combinations so such combinations should not be used or external devices should be used in accordance with the requirements of AS/NZS 4777.1.

2.1. Working Mode

The EP760 offers four operating modes to accommodate various energy plans. You can choose the one that best suits your home power supply configuration.

• Mode 1

If there is already a grid-connected PV system, combine it with the EP760 by means of AC coupling. This setup prioritizes PV power for the load, charges the batteries with excess power, and feeds surplus energy back to the grid.

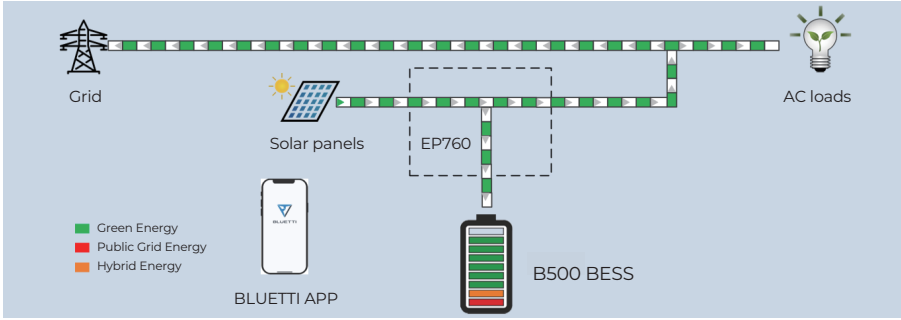

Figure 2-1

• Mode 2

In the absence of a PV system, the load is powered by the backup battery. When the battery charge is depleted, the system automatically switches to grid power to continue supplying the load.

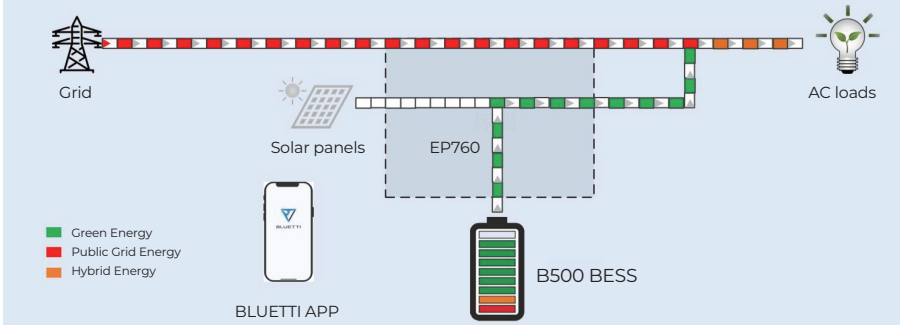

Figure 2-2

• **Mode 3**

If the grid is disconnected, the PV and backup batteries work together to provide power to the load.

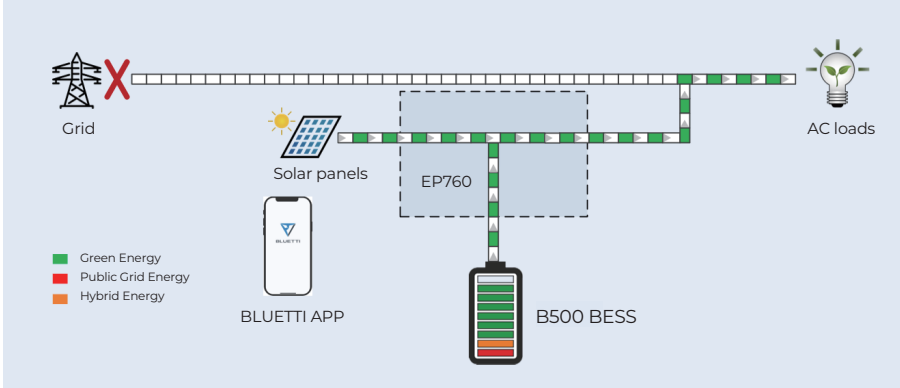

Figure 2-3

• **Mode 4**

The batteries are charged from the grid, and the BLUETTI App gives you the flexibility to set the charging time and power to suit your needs.

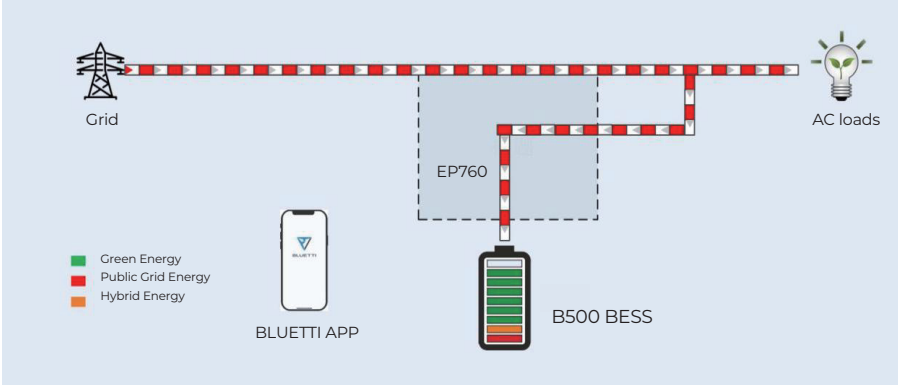

Figure 2-4

2.2 Features

Solar Energy Optimization: Triple MPPT charge controllers to maximize solar input, while storing solar energy in LiFePO4 batteries. The EP760 can also work with grid-connected PV systems to make the most of renewable energy.

Grid-Connected Flexibility: The inverter allows for grid charging and seamless backup power during outages. It also enables grid power to bypass it to supply home appliances directly.

App Control & Monitoring: The inverter provides various ports for device and system monitoring, including RS485,Ethernet,bluetooth, WLAN, and CAN; various parameters can be configured for optimal operation. All the inverter information is accessible through the BLUETTI App.

Enhanced Connectivity: The EP760 offers a range of interfaces for connecting external devices. Monitor energy usage with the CT interface, integrate with smart meters using the COM interface, and ensure compatibility with diesel generators through the DRMs interface.

Seamless Device Integration: The EP760 is designed with I/O ports that enable effortless connection with external devices, ensuring smooth system management and connectivity.

Battery expansion: The EP760 supports 2-4 battery packs (B500) to expand the total capacity.

2.3 Inverter Overview

2.3.1. EP760 Inverter Appearance

Table 2-1

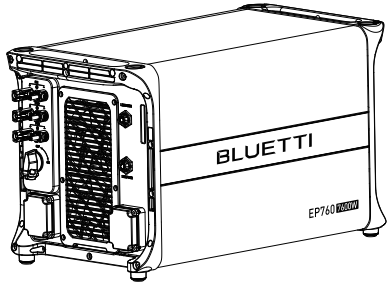	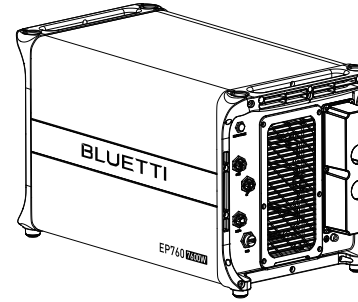
Left	Right

2.3.2 EP760 Inverter Dimensions

Table 2-2 (Unit:mm)

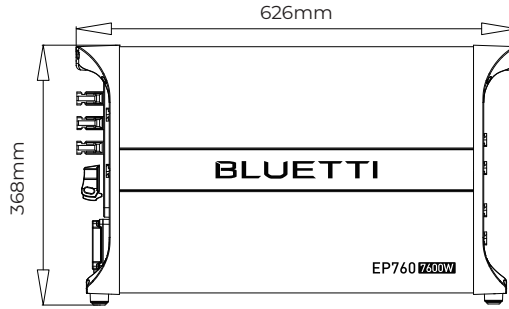	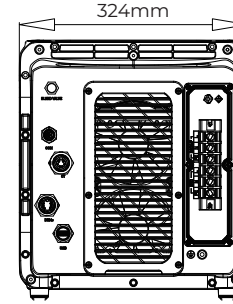
Front	Right

2.4. Inverter Interface

2.4.1.EP760 Interface

Table 2-3

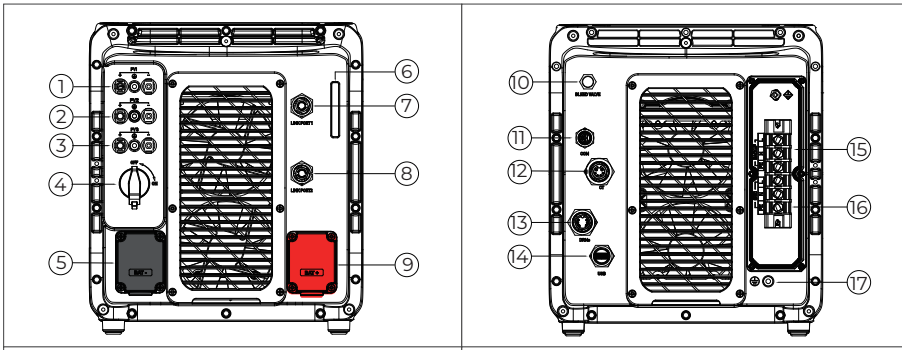

Left	Right

No.	Name	Decisive Voltage Classification	No.	Name	Decisive Voltage Classification
1	PV Input 1	DVC-C	10	BLEED VALVE	Not applicable
2	PV Input 2	DVC-C	11	COM Port (Meter Port)	DVC-A
3	PV Input 3	DVC-C	12	CT Port	DVC-A
4	DC Switch	Not applicable	13	DRMs Port (Generator)	DVC-A
5	BAT- Terminal	DVC-C	14	USB Port	DVC-A
6	LED Indicator	Not applicable	15	BACKUP Terminal	DVC-C
7	LINK PORT 1	DVC-A	16	GRID Terminal	DVC-C
8	LINK PORT 2	DVC-A	17	GND Terminal (Grounding)	Not applicable
9	BAT+ Terminal	DVC-C			

2.4.2 Interface Description

Table 2-4

Terminal	Description		Type of Cable Required	Cable specification
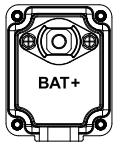	BAT+: to the battery BAT+ terminal		Battery expansion cable (Positive)	
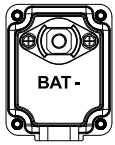	BAT-: to the battery BAT- terminal		Battery expansion cable (Negative)	
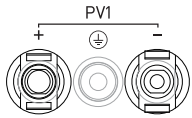	PV1+: to the positive terminal of solar panel PV1-: to the negative terminal of solar panel PV1 PE: PV1 grounding		Outdoor multi-core copper cable (Optional)	Conductor cross-sectional area: 2.5mm²
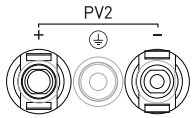	PV2+: to the positive terminal of solar panel PV2-: to the negative terminal of solar panel PV2 PE: PV2 grounding		Outdoor multi-core copper cable (Optional)	Conductor cross-sectional area: 2.5mm²
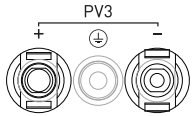	PV3+: to the positive terminal of solar panel PV3-: to the negative terminal of solar panel PV3 PE: PV3 grounding		Outdoor multi-core copper cable (Optional)	Conductor cross-sectional area: 2.5mm²
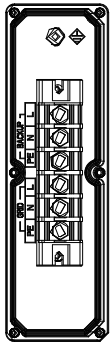	Load（BACKUP）	L	AC copper cable (Optional)	Conductor cross-sectional area: 6mm²
		N		
		PE		
	Grid (GRID)	L	AC copper cable (Optional)	Conductor cross-sectional area: 10mm²
		N		
		PE		

2.4.3 USB

Warning

Only for USB drive access, not for USB charging.

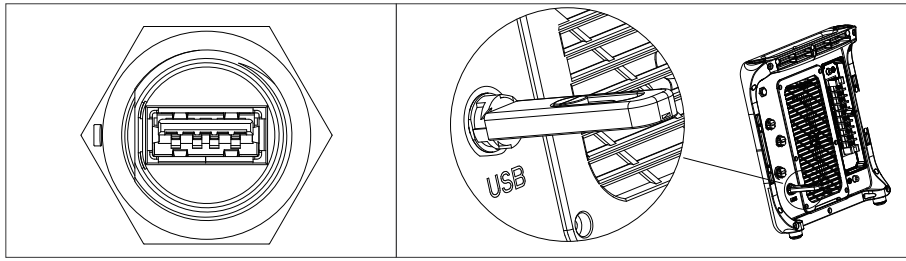

Fig. 2-6

The port is used for EP760 inverter firmware upgrade.

The USB drive should be formatted as FAT32 with no more than 32G in size.

2.4.4 DRM Port

The inverter supports DRM0

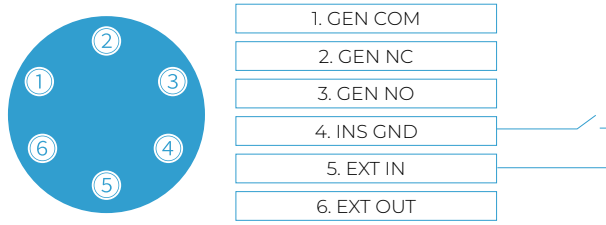

Table 2-5

PIN	Category	Definition	Specifications
1	GEN COM	Single-pole & double-throw relay common terminal	External DC input limit: 30VDC/3A.
2	GEN NC	Single-pole & double-throw relay normally closed output	
3	GEN NO	Single-pole & double-throw relay normally open output	
4	INS GND	DRM0 Output Ground	Turn on S0 and the inverter shuts down. Turn off S0 and the inverter is back to on-grid.
5	EXT IN	DRM0 Input	
6	EXT OUT	I/O output	Not applicable

2.4.5. LINK PORT 1 & LINK PORT 2

Table 2-6

Interface	Function	Note
Link Port 1	Connect the IoT controller	Refer to Fig. 6-7 for details.
Link Port 2	Connect the battery pack	

2.4.6. CT Port

Table 2-7

PIN	Definition	Description	Note
L	CT-L1+ (Red)	CT output positive terminal	Connect to the Phase L CT in the grid.
N	CT-L1- (Black)	CT output negative terminal	

2.4.7. COM Port

Table 2-8

RS485 Meter Communication Port	Function	Wiring
A (1) (L)	A: RS485 differential signal +	Connect to meter A2
B (2) (N)	B: RS485 differential signal -	Connect to meter B2

2.5 LED Indicator

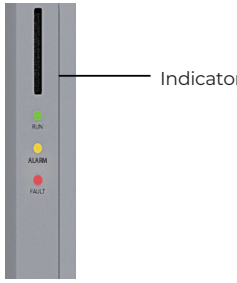

Fig. 3-2

Table 2-9

Situation	Run	Alarm	Fault
No alarm and fault	ON	/	/
Alarm	ON	ON	/
Fault	/	/	ON
Alarm and fault	/	ON	ON

2.6 Buzzer Alarm

When a fault occurs, the buzzer emits a series of 5 beeps. Each time lasts for 2 seconds with a 1-second interval between each beep.

Note: The buzzer alarm can be turned off in the BLUETTI App.

Table 2-10 Fault Code

Fault Code	Description	Solution
5.	Hardware BUS overvoltage	Turn off the inverter and wait 30 minutes to restart it. If the symptom persists, please contact the BLUETTI support team.
6.	Hardware BUS2 overvoltage	
7.	Hardware battery overvoltage	
8.	Hardware inverter overcurrent	
10.	Hardware LLC1 current overcurrent input	
26.	Hardware PV1 fault	Please contact the BLUETTI support team.
27.	Hardware PV2 fault	Please contact the BLUETTI support team.
28.	Hardware PV3 fault	Please contact the BLUETTI support team.
34.	Hardware overcurrent input	Please contact the BLUETTI support team.

2.7 Inverter Cables

Table 2-11 Inverter Cables

Picture	Description	Interface (connect to)
	Red battery power cable (Positive)	BAT+
	Black battery power cable (Negative)	BAT-
	CT communication cable (4m)	CT port

Table 2-12 Optional Inverter Cables

Picture	Description	Interface (connect to)
	COM communication cable (4m)	COM port

2.8 Export Limit Control

The inverter has export limit control function and is designed to comply with AS/NZS4777.2:2020, see below schematic.

The inverter also has generation limit control function and is designed to comply with AS/NZS4777.2:2020, but it is not intended to be available to customers.

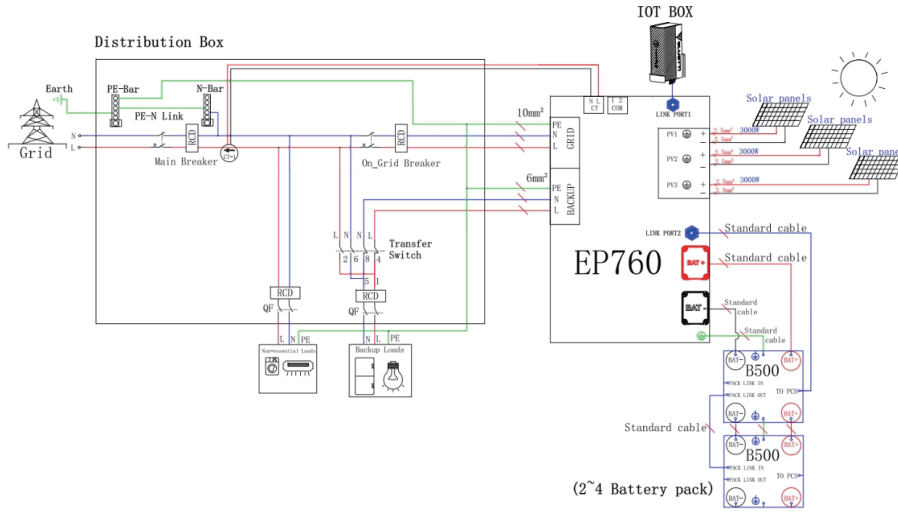

Export limitation system schematic

Soft and Hard limit: After the user enables this function through the APP, the power limiting algorithm of single/multiple energy storage inverters is described as follows:

1.The current transformer (CT) is added to the input end of the power grid to collect the current information of the power grid, and the inverter reads the CT information and generates the power grid power information combined with the voltage information of the power grid. Finally, the output of the inverter is controlled by a specific power limiting algorithm to achieve the purpose of power limiting. The electrical connection diagram is shown below, in which CT detection equipment is the key to the realization of this function.

For the detailed installation procedure of CT, please refer to Step 4.6.8.

2.The closed-loop feedback control algorithm is introduced, in which the maximum grid-connected discharge power delivered by APP is the target signal of the feedback system, and the real power at the grid end is the feedback signal of the feedback system. The real power of the grid end is obtained by the inverter through the collection and calculation of the grid voltage and grid current signals (the CT

detection equipment described above is used here);

3.PI adjustment for deviation of target and feedback

4.Allocate the PI generated in the previous step to adjust the output. This step should be reasonably allocated based on the number of energy storage inverters connected and the current load

5.After each energy storage inverter controls the adjustment amount allocated in the previous step, the duty cycle signal of the control power device is generated, and the final output power signal meets the power limit range

6.When the inverter detects a fault that prevents the output of the inverter, the inverter will immediately stop the external output power.

Note: 1) The information mentioned in some steps involves the company's intellectual property rights, and will not be described in detail here.

2) With the above algorithm, when the output changes, the output power of the inverter can be reduced to the power limit within 15 seconds

How to set and control:

1.To effectively keep track of and control EP760 hybrid inverter, begin by downloading and installing the user-friendly BLUETTI App. Once installed, Register and log in according to the sequence shown in Figure 1 to 5.

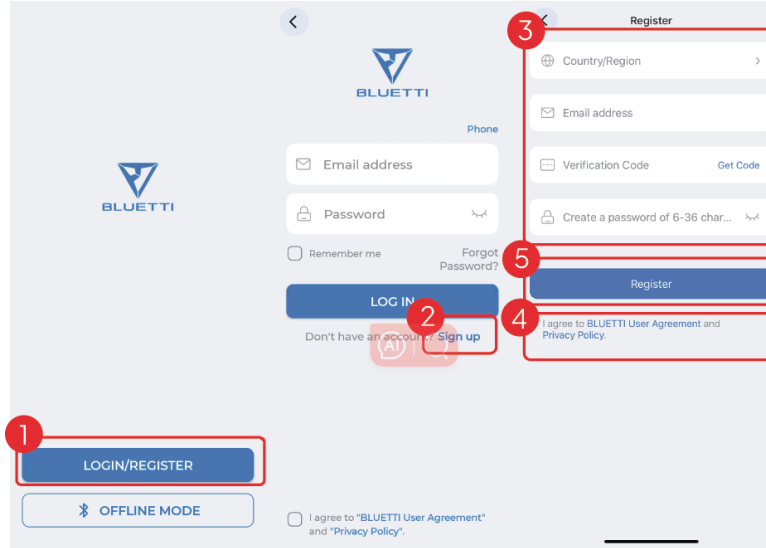

After a successful login, perform steps 1 to 3 in the following figure to connect to the device using Bluetooth.

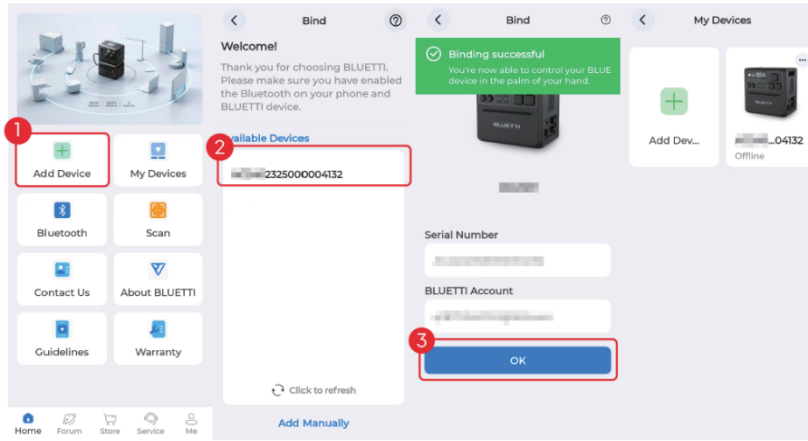

2.Connect the App to EP760 via Bluetooth or WIFI, and you'll be directed to the operation status page. Click button ② in the picture below to enter the operation setting, and then enter the Advanced Setting operation from the setting page.

3.Advanced Settings

For soft limit，enable Feed into Grid，Set the power and current output of the inverter by setting Discharge Power and Discharge Current in the figure below.

For hard limit，This function is disabled by default. To enable this function, perform the following operations in the figure below

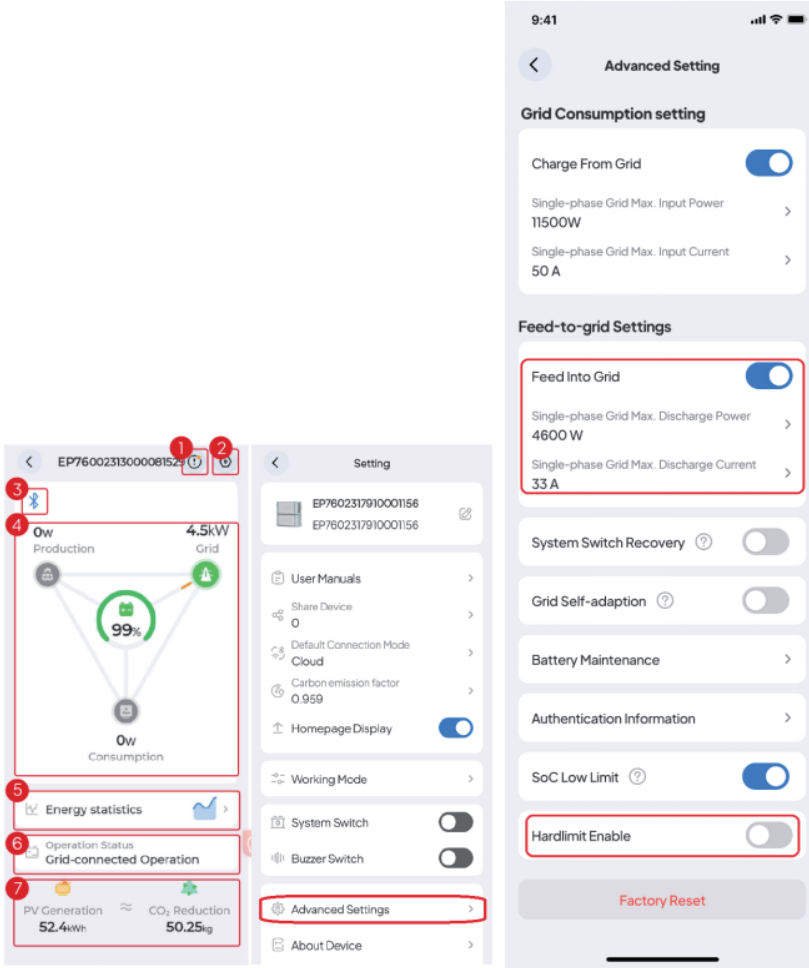

After turning on Feed into Grid, fill the max discharge power and max discharge current, then the smaller of discharge power and the product of discharge current and voltage will be the limit, for example, the discharge power is 7600W and the discharge current is 20A, the export limit will be 230V*20A=4600kW. if the filled discharge power and the product of filled discharge current and voltage exceed 7600W, the export limit will be 7600W.

3. IoT Controller

3.1. Communication Principle

The IoT controller supports WiFi and Bluetooth dual-mode communication, allowing connectivity between the EP760 and BLUETTI App. Everything about the system, including power generation and consumption, alarms, and operating status, can be uploaded to the BLUETTI server via the WiFi network. By registering the EP760 with your BLUETTI account, you're able to monitor and control this unparalleled power plant anytime and anywhere.

Table 3-1

Communication	Note
WiFi	Standard
Bluetooth	Standard

3.2 IoT Controller Overview

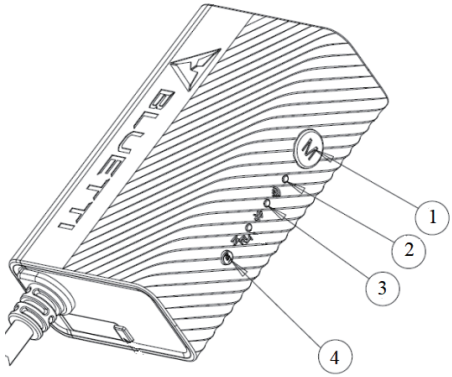

Figure 3-2

1.Menu Button.
To factory reset the controller, press and hold this button for about 5s till all LED indicators flash.

2. WiFi Indicator.
Flash till the controller connected to WiFi.

3. Bluetooth Indicator.
Flash till the controller connected to Bluetooth.

4.Reboot Button.
Press to reboot the controller.

3.3 Safety Instructions

- The IoT controller is ONLY applicable to BLUETTI products.
- Do not keep the controller near heat sources or in high temperatures.
- Do not store the controller with flammable liquids, gases, or explosive materials.
- The inspection, testing, and maintenance should be performed by qualified personnel.

	Warning
!	• Do not block or cover the openings of the controller. Keep it out of the reach of children. • Use dry powder fire extinguisher in case of fire.

3.4 Connection and Operations

Step1: Plug the IoT cable into EP760 LINK PORT 1.

Step2: Turn on EP760, and the IoT controller starts up automatically.

Step3: Configure the controller in BLUETTI App.

- Scan the QR code below to download the BLUETTI App, or search for “BLUETTI” in the App Store/Google Play.

Download on the App Store

GET IT ON Google Play

- The BLUETTI App connects to EP760 via Bluetooth or WiFi. Tap “LOGIN/REGISTER” and “Sign up” to register your BLUETTI account. Fill in the necessary information to continue.

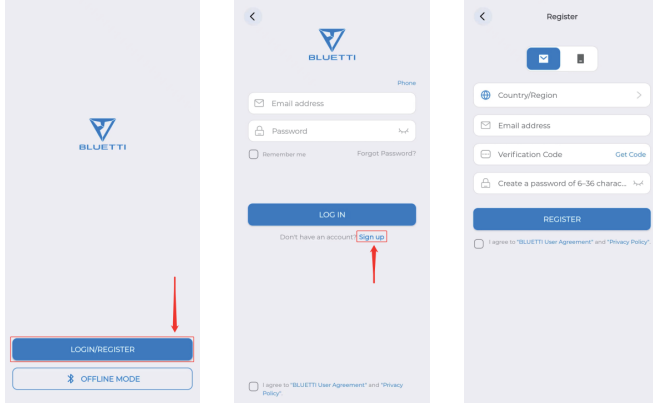

- Check your email for verification code from BLUETTI server, and fill in the code to activate your BLUETTI account.

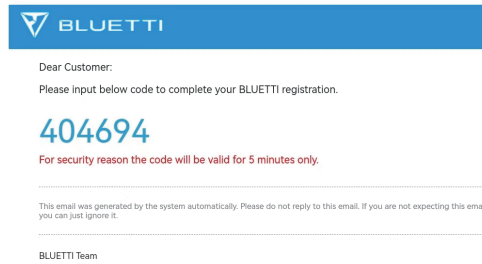

Instruction

Firewall Settings
When EP760 is connected to a network with firewall for outbound communication, set permission to access port 18760 as follows.

Action	Source IP	Source Port	Target IP	Target Port
Allow	0.0.0.0/0	All	0.0.0.0/0	18760

For more information, please visit:

@ BLUETTI Support
@ BLUETTI Official

@bluetti_australia

@bluetti.au

@ bluetti_inc

sale-au@bluettipower.com

Customer Service(AU)

Email: sale-au@bluettipower.com

Address: Unit 15, 25 Gibbes Street Chatswood NSW 2067

SHENZHEN POWEROAK NEWENER CO., LTD.

Address: F19, BLD No.1, Kaidaer, Tongsha Rd No.168, Xili Street, Nanshan, Shenzhen, China

Web: https//www.bluettipower.com

BLUETTI

Just Power On

P/N:17.0303.0677-01A1