EP2000
Energy Storage System

User Manual V1.0

Important Instructions

For the best experience and performance,
fully charge your unit and update to the latest firmware before first use. See the appendix "Update Firmware via BLUETTI App" for guidance.
Read and understand this manual before use and keep it handy for future reference.

BLUETTI



Thank You!

Thank you for making BLUETTI a part of your family.
From the very beginning, BLUETTI has tried to stay true to a sustainable future through green energy storage solutions while delivering an exceptional eco-friendly experience for our homes and our world.
That's why BLUETTI makes its presence in 100+ countries and is trusted by millions of customers across the globe.

Copyright © Shenzhen PowerOak Newener Co., Ltd. All rights reserved.

No part of this document may be reproduced or transmitted in any form or by any means without the prior written consent of Shenzhen PowerOak Newener Co., Ltd.

Notice

BLUETTI's products, services, and features are subject to the agreed-upon terms and conditions during purchase. Please note that some products, services, or features described in this manual may not be available under your purchase contract. Unless otherwise specified in the contract, BLUETTI makes no representations or warranties of any kind, express or implied, with respect to the contents of this manual.

The contents of this manual are subject to change without notice. Please get the latest version from: https://www.bluettipower.eu/pages/manuals

If you have any questions or concerns about this manual, please contact BLUETTI support for further assistance.

Shenzhen PowerOak Newener Co., Ltd.

F19, BLD No.1, Kaidaer, Tongsha RD No.168, Xili street, Nanshan, Shenzhen, China

Web: https://www.bluettipower.com

About the Manual

Purpose

This user manual describes the installation, electrical connection, commissioning, maintenance and trouble shooting of EP2000 Energy Storage System (herei n after referred to as EP2000). **Please read and understand all instructions in this manual before use.**

Target Audience

- Installation, operation, and maintenance technicians
- End-user

Symbol Conventions

This manual uses the following symbols to highlight important information:

	**Danger** It indicates a hazardous situation which, if not avoided, will result in death or serious injury.
	**Warning** It indicates a hazardous situation which, if not avoided, could result in death or serious injury.
	**Caution** It indicates a hazardous situation which, if not avoided, could result in minor or moderate injury.
	**Attention** It indicates a potentially hazardous situation which, if not avoided, could cause substantial damage to property and the environment.
	**Instruction** It contains important additional information as well as useful tips for safe, efficient and hassle-free operation of the EP2000 energy storage system.

Contents

About the Manual i

1. Safety Guideline 07
   - 1.1 Safety Instructions 07
   - 1.2 Installation Safety 10
   - 1.3 General Requirements 12
   - 1.4 Electrical Safety 16
   - 1.5 Maintenance Requirements 17
   - 1.6 Transportation Requirements 18
   - 1.7 Storage Requirements 18
   - 1.8 Handling Requirements 18
   - 1.9 Label Description 19
2. EP2000 Energy Storage System 20
   - 2.1 Introduction 20
   - 2.2 Working Modes 21
3. EP2000 Inverter 25
   - 3.1 Overview 25
   - 3.2 LED Indicators 27
   - 3.3 Buzzer Alarm 27
   - 3.4 Maintenance and Care 27
4. B5000 Battery Energy Storage System 28
   - 4.1 Introduction 28
   - 4.2 Overview 28
   - 4.3 Status of Indicators 34
   - 4.4 System Maintenance 34
5. EMS Controller 35
   - 5.1 Communication Principle 35
   - 5.2 Key Features and Interfaces 35
   - 5.3 Installation 38
   - 5.4 Safety Instructions 39
   - 5.5 Connection and Operations 39
6. System Installation 43
   - 6.1 EP2000 Packing List 44
   - 6.2 HV800 Packing List 46
   - 6.3 B700 Packing List 47
   - 6.4 B5000-2S Packing List 48

6.5 Accessories ---- 49
6.6 Installation Requirements ---- 49
6.7 Prepare the Necessary Tools ---- 55
6.8 Installation ---- 57
7. Electrical Connection ---- 58
7.1 EP2000 ESS Wiring Diagram ---- 59
7.2 B5000 BESS Interface Instructions ---- 60
7.3 EP2000 Inverter Interface Instructions ---- 61
7.4 Preparation ---- 62
7.5 Grounding Cable ---- 62
7.6 Power Cable ---- 64
7.7 Communication Cable ---- 65
7.8 AC Power Cable ---- 66
7.9 PV Cable ---- 67
7.10 GRID and BACKUP Cables ---- 70
7.11 COM2/DRMs/COM3 Cable ---- 72
7.12 Other Ports ---- 74
8. System Commissioning ---- 81
8.1 Preliminary Check ---- 81
8.2 Power on ---- 81
8.3 OTA Update ---- 81
8.4 Power off ---- 82
9. System Disposal ---- 83
9.1 Remove the Inverter ---- 83
9.2 Recycle the Inverter ---- 83
9.3 Recycle the Battery Pack ---- 83
10. Troubleshooting ---- 84
10.1 EP2000 Inverter ---- 84
10.2 B700 Battery ---- 89
11. Specifications ---- 92
11.1 EP2000 Inverter ---- 92
11.2 HV800 Battery Controller ---- 95
11.3 B700 Battery ---- 96
11.4 EP2000 ESS ---- 97

1. Safety Guideline

1.1 Safety Instructions

1.1.1 Statement

Before installing, operating, or maintaining this equipment, please read this manual thoroughly and follow all safety precautions indicated on the equipment and in this manual.

Look for and follow all **"Instruction"**, **"Attention"**, **"Caution", "Warning"**, and **"Danger"** statements in this manual. The safety guidelines provided herein do not cover all possible safety considerations. Please follow all relevant international, national, or regional standards, as well as industry practices. Our company shall not be liable for damages resulting from non-compliance with these safety requirements or standards.

For issues or operations not covered in this manual, please contact BLUETTI support, otherwise we are not responsible for any damage or injury caused by unauthorized operations.

Always consider the actual on-site conditions when using this equipment. Use it only in environments that meet the requirements outlined in this manual. Failure to do so may cause equipment malfunctions or damage, which are not covered by the warranty. Our company is not liable for any injuries or property damage caused by improper use.

For Australia: The inverter has an export limit function, but it has not been tested to AS/NZS 4777.2:2020.

Thus, for proper installation and operation of this equipment, it's crucial to adhere to the following guidelines:

- Always operate or store the equipment in the conditions specified in this manual.
- The installation and ambient conditions must comply with the regulations in the relevant international, national or regional standards.
- Avoid unauthorized disassembly, equipment alterations, or software code modifications.

Our company shall also not be liable for the following situations or their consequences:

- Damage caused by force majeure events such as earthquakes, fires, storms, floods, or mudslides.
- Transport-related damages during customer handling.
- Equipment damage due to improper storage conditions as outlined in the manual.
- Hardware or data loss resulting from customer negligence, improper use, or intentional damage.

- System damage caused by third parties or customers, including improper handling or installation not in line with the manual's instructions.
- Damage from adjustments, modifications, or removal of labels not authorized in the manual.
- Use of the equipment in environments not compliant with relevant international, national, or regional standards.
- Installation or operation by unauthorized personnel.
- Unauthorized disassembly, alteration of equipment, or modification of software code.
- Use of customer-provided materials or tools that do not meet local legal requirements or relevant standards.

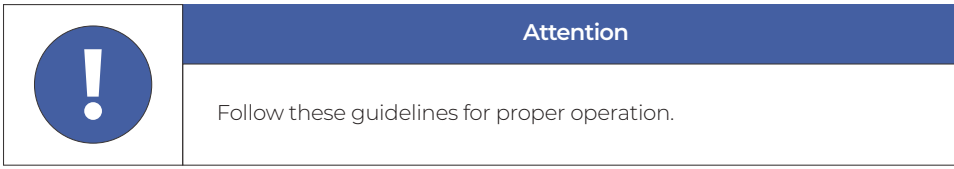

- This equipment is not intended for use with devices that have high-performance requirements for UPS (Uninterruptible Power Supply), including but not limited to data servers, workstations, medical equipment, and similar devices. Our company shall not be liable for any data loss or equipment damage resulting from the violation of this requirement.

1.1.2 General Requirements

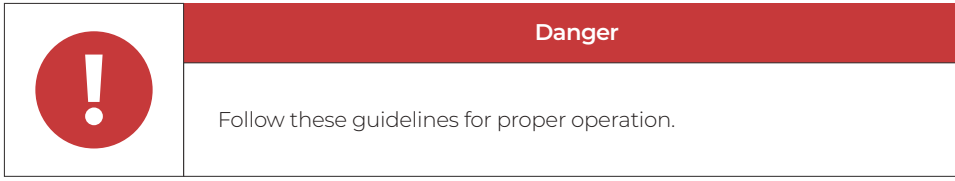

- Do not install, use, or maintain the equipment in adverse weather conditions such as lightning, rain, snow, and strong breezes (including handling, operating, plugging and unplugging signal connections for outdoor facilities, working at heights, and outdoor installations).
- Always turn off the power source before starting any electrical work.
- Do not clean the equipment with water.
- Do not disassemble, modify, tamper with or repair the equipment on your own.
- Regularly inspect the equipment and its accessories for signs of damage or deterioration.

- Use a tester to check for dangerous voltage before touching any conductor or terminal.
- In the event of a fire, prioritize personal safety. If safe to do so, immediately disconnect power at the distribution box and use a CO_2, FM-200, or ABC dry powder fire extinguisher.
- If a fire occurs, EVACUATE the building or affected area promptly. Activate the nearest FIRE ALARM system and CONTACT local emergency services.
- Use only cables and accessories provided or recommended by BLUETTI.
- Keep the equipment away from heat sources or high temperatures, and do not expose it to direct sunlight.
- Maintain a well-ventilated and spacious installation area.
- Do not block or cover the vents of the equipment.
- Use the equipment only for its intended purpose and refrain from stacking objects on or near it during storage or use.
- Do not move the equipment during operation, as vibrations and shocks from movement can damage internal hardware.
- In case of malfunction, immediately power off the equipment and contact BLUETTI support or your local BLUETTI dealer if the manual does not adequately explain the issue.
- Do not place the equipment on unstable or inclined surfaces.
- Do not insert foreign objects into any ports or vents of the equipment.
- Keep the equipment out of the reach of children and pets.
- Do not install the equipment where it may be exposed to water or submerged.
- Do not touch the equipment, as the shell may become hot and pose a risk of burns when it's running.

	Instruction
	Comply with applicable laws and regulations.

- When handling, installing, wiring, or maintaining this equipment, comply with the country or region's legal regulations and standards.
- Use materials and tools that meet applicable legal requirements and standards.
- Understand the operational principles and standards relevant to the energy storage system in the location.

1.1.3 Personnel Requirements

- Only qualified and authorized personnel should perform installation, commissioning, and maintenance, adhering to proper safety precautions and operating practices.
- The personnel who need to work on the equipment must possess the necessary qualifications and electrical certifications required by local regulatory authorities.
- Only authorized personnel are allowed to replace the equipment or components (including software).
- Only qualified personnel are allowed to remove safe features and inspect the equipment.
- Only personnel who need to work on the equipment are allowed to access the equipment.

1.2 Installation Safety



Danger

Follow these guidelines for proper operation.

- Avoid working with live electrical components.
- Before installation, double check the equipment for any signs of damage or defects to minimize potential risks.
- Make sure that the equipment and all associated switches are in the "OFF" position to prevent electric shock.
- Do not touch any terminal while the equipment is running, as it may pose a risk of electric shock.
- Use a tester to check for dangerous voltage before touching any conductor or terminal.



Warning

Follow these guidelines for proper operation.

- Installation should only be performed by qualified or authorized personnel.
- All cables should be securely connected with proper insulation and meet required standards.



Attention

When moving the equipment, be mindful of its weight and balance. Take care to avoid tipping or dropping it, as that could result in damage to the equipment or injury.

1.2.1 General Requirements

- After installing the equipment, remove the idle package materials from the site such as cardboard, foam, plastic, nylon ties, etc.
- Keep people other than the installers away from the equipment.
- Handle the equipment and accessories carefully during transport; use original or protective packaging.
- Seal wiring ports securely with fireproof and waterproof materials.
- Do not alter or cover equipment markings or nameplates.
- Check and make sure all safe guards, including screws and waterproof rings, are in place and properly tightened.
- Secure the unit firmly to the floor or other stable objects, such as walls or mounting brackets before operation.
- Clean the equipment and accessories with a soft cloth; avoid water or harsh chemicals.
- Do not make any changes to the equipment's structure, installation sequence, or any other aspects without permission.

1.2.2 Drilling Requirements

When drilling holes in the wall or on the ground, follow these safety measures:

- Wear goggles and protective gloves at all times.
- Shield the equipment to prevent debris from falling into it, and remove all debris after drilling.
- Drill holes on the equipment is forbidden as it may damage the equipment's electromagnetic shielding performance. The metal shavings may cause short circuits on the circuit board.
- Make sure to check for any embedded pipes or cables before drilling to prevent short circuits or other hazards.

1.3 Battery Safety

1.3.1 Statement

Our company shall not be liable for equipment malfunctions, component damage, personal injury, property loss, or other issues caused by the following:

- Failure to promptly charge the battery after installation, leading to overdischarge and damage.
- Improper battery maintenance as per the user manual, including irregular charging, incorrect capacity expansion, or prolonged incomplete charging, and frequent over-discharging of the battery. Contact BLUETTI support within 6 months of installation for any expansion needs; do not attempt this on your own.
- Incorrect battery operational settings.
- Failure to charge the battery as required during storage, resulting in capacity loss or irreparable damage.
- Improper operation or connection errors causing battery short-circuits, damage, drops, or leaks.
- Using the battery in ways not specified in the user manual, such as using batteries from other brands or those with different rated capacities, whether by users or third parties.
- Battery damage caused by operating conditions or external power parameters that do not meet environmental requirements.

1.3.2 Installation Requirements

- Install the battery away from liquids and avoid locations near vents, windows, or water pipes to prevent leaks that could damage equipment or cause short circuits.
- Before installation, inspect the packaging for any signs of damage.
- After unpacking the battery, place it as directed. Do not invert, tilt, stack, or place it sideways to prevent damage from impacts or falls.
- Use a torque wrench to tighten screws correctly during installation and check them regularly.
- Prevent the positive and negative terminals of the battery from touching each other or any metal objects to avoid heat generation or electrolyte leakage.
- Remove unused packaging materials such as foam, cardboard, plastic, and excess cables from the equipment area after installation.

1.3.3 General Requirements



Danger

Follow these guidelines for proper operation.

- Use the battery within the specified temperature range.
- Do not expose the battery to humidity or corrosives, as this may cause the battery to rust, corrode, and leak chemicals.
- Keep the battery away from high temperatures or heat sources such as sunlight, fire, transformers, and heaters. Excessive heat can cause leaks, smoke, release of flammable gases, overheating, fires, or explosions.
- Do not dismantle, alter, or damage the battery, as this could lead to fire or explosion risks. For instance, do not insert foreign objects into the battery or submerge it in water or other liquids.
- If any part of the battery has been submerged in water, do not touch it to prevent electric shock. Contact the battery company immediately for assistance.
- Never short-circuit the battery terminals, as this can create a sudden surge of electricity and release significant energy, leading to leaks, smoke, release of flammable gases, overheating, fires, or explosions. Do not attempt to maintain a powered battery to prevent short circuits.
- Do not use damaged batteries or components. Improper use or misuse of damaged batteries or components can cause overheating, which may lead to leakage, smoke, release of flammable gases, thermal runaway, fire, or explosion.
- Avoid welding or grinding near batteries to prevent fire from sparks or arcs.
- Store damaged batteries away from flammable materials and undamaged ones. Only professionals should handle damaged batteries.
- Lithium-ion batteries pose a high fire risk. Be aware of the following safety risks:

  a. Thermal runaway can release flammable and harmful gases such as CO and HF. Vapors from burning batteries may irritate the eyes, skin, and throat.

  b. Flammable gas concentration from thermal runaway batteries can cause deflagration and explosion.

  c. Battery electrolyte is flammable, toxic, and volatile.
- If a battery leaks or emits odors, don't approach it — contact professionals for safe disposal. Use protective gear like goggles, rubber gloves, gas masks, and protective clothing.

- Electrolyte is corrosive and can cause irritation and chemical burns. If you come into direct contact with battery electrolyte:

  a. Inhalation of Vapors: Evacuate the contaminated area, get fresh air immediately, and seek medical attention.

  b. Eye Contact: Immediately flush eyes with water for at least 15 minutes, do not rub eyes, and seek medical attention immediately.

  c. Skin Contact: Immediately wash the infected area with soap and water and seek medical attention immediately.

  d. Ingestion: Seek medical attention immediately.
- Handle the battery with care. Do not invert, tilt, or stack the battery improperly to avoid damage.
- Avoid mechanical vibrations, drops, impacts, punctures, or pressure shocks to the battery, as these can cause damage or fires.
- Pay attention to the status indicators on the battery and related products.

1.3.4 Other Requirements

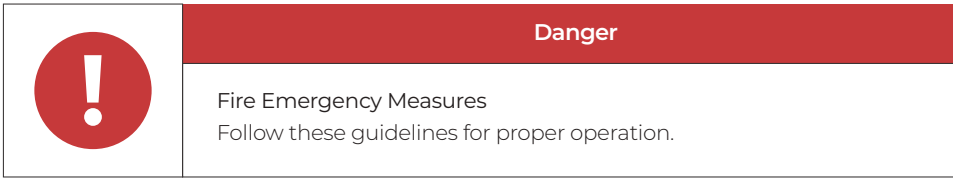

- In case of fire, power off the system if it is safe to do so.
- Use carbon dioxide, FM-200, or ABC dry powder fire extinguisher.
- Remind firefighters to avoid contact with components carrying dangerous voltage to prevent the risk of electric shock.
- Overheating may cause the battery to deform and leak corrosive electrolytes or toxic gas. Keep away from batteries to avoid skin irritation and chemical burns.

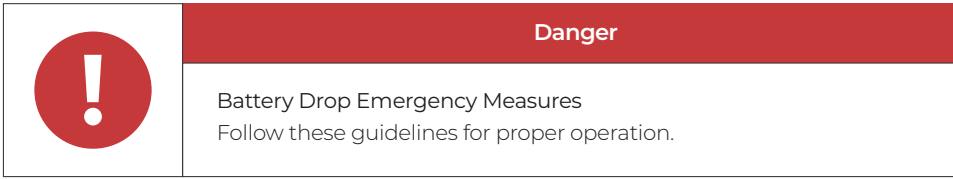

- If the battery pack is dropped, violently impacted or tilted during installation, internal damage may occur. So do not use such battery packs to avoid safety risks such as battery leakage and electric shock.
- If the dropped battery is not obviously deformed or damaged, and there is no abnormal smell, smoke or fire, please contact a professional to transfer the battery to an open and safe place, and contact BLUETTI support.
- If the battery is obviously damaged or there is an abnormal smell, smoke or fire, please evacuate immediately, and contact a professional or BLUETTI support. Professionals can use fire extinguishing facilities to extinguish the fire under safety protection.

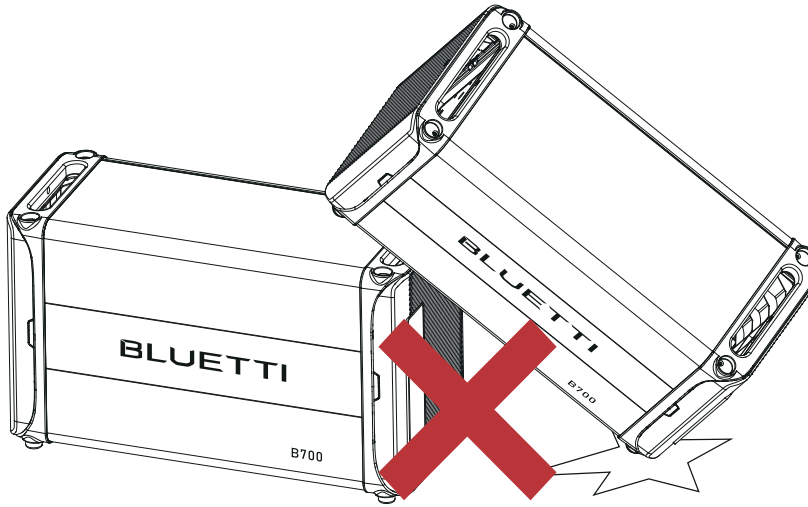

1.3.5 Battery Disposal

- Safely and carefully dispose of used batteries by the provisions of local laws and regulations. Avoid treating batteries as regular household waste, as improper disposal can lead to environmental pollution.
- If you find a leaking or damaged battery pack, contact us immediately or an authorized battery recycling partner for expert assistance.
- If the battery pack reaches the end of its lifespan, please contact the battery recycling company for further assistance.
- To maintain battery integrity, do not expose used batteries to high temperatures or direct sunlight.
- Protect used batteries from moisture and corrosive substances to avoid potential hazards.

1.4 Electrical Safety

1.4.1 General Requirements

- Ensure all electrical connections comply with national/regional electrical standards.
- User-provided cables should meet local legal requirements.
- Use specialized insulated tools for electrical work.
- Both AC and DC voltage sources are terminated inside this equipment. Each circuit must be individually disconnected before servicing. When the photovoltaic array is exposed to light, it supplies a DC voltage to this equipment.

1.4.2 Grounding Requirements

- Always make the ground connection first during installation and remove it last during disassembly.
- Take care not to damage the grounding conductor.
- Before operating the equipment, always confirm that it is securely and reliably grounded.
- According to IEC62109-1 guidelines, to safely use the inverter in case the inverter's ground wire is damaged or disconnected, connect the inverter's protective ground wire. Ensure the ground wire meets at least one of these criteria:
  a. Use a single-core outdoor copper cable with a conductor cross-sectional area of ≥10 mm^2 if the PE terminal in the AC connector is not connected.
  b. Use cables with the same wire diameter as the AC output lines, grounding both the PE terminal in the AC connector and the chassis grounding screw separately.

1.4.3 Wiring Requirements

- Cables used in high-temperature environments may experience insulation aging or damage. Maintain a minimum distance of 30 mm (1.18 inches) between cables and heat-emitting devices or areas with thermal sources.
- Group cables of similar types together to reduce electromagnetic interference. Separate different types of cables by at least 30 mm (1.18 inches) and avoid twisting or crossing them.
- Cables used in energy storage systems must be securely connected, well-insulated, and of suitable specifications.
- Take necessary measures to protect cables when passing through pipes or holes.
- In cold temperatures, severe impacts or vibrations can cause the plastic coating of cables to become brittle and crack. To ensure safe installation:
  a. Lay and install all cables at temperatures above 0°C (32°F). Handle cables with care, especially when working in cold environments.
  b. If cables have been stored in temperatures below 0°C (32°F), store them at room temperature for at least 24 hours before installation.

1.5 Maintenance Requirements



Danger

Follow these guidelines for proper operation.

- Always turn off and disconnect all power sources before performing any maintenance on the equipment. Follow the safety guidelines provided in this manual and other relevant documents strictly. Failure to do so may result in electric shock, serious injury, or substantial property damage.
- Warning — These servicing instructions are for use by qualified personnel only. To reduce the risk of electric shock, do not perform any servicing other than that specified in the operating instructions unless you are qualified to do so.
- The equipment has multiple input channels, disconnect all electrical connections and leave it completely powered down before performing any operations. Follow these steps:

  Step 1: Disconnect the power grid.

  Step 2: Disconnect the inverter from the solar and battery systems.

  Step 3: Wait at least 30 minutes for the equipment to discharge completely.
- For any maintenance needs, please contact your local authorized service center.
- Place temporary warning signs or erect fences to prevent unauthorized access to the maintenance site.
- Before use, ensure a reliable grounding connection for personal safety and proper equipment function.
- Wear personal protective equipment (PPE) during operation. Stop operation immediately and take precautions if there's a risk of injury or equipment damage.
- Use tools correctly to avoid injury or damage to equipment. Never touch energized components.
- Do not clean the electrical components inside and outside the cabinet with water.
- Do not stand, lean on, or sit on top of the equipment, and take care not to damage the equipment modules.
- When the battery fails, avoid touching the battery and be careful of high temperature.
- Do not disassemble or damage the battery. The released electrolyte is harmful to your skin and eyes. Avoid contact with electrolyte.
- Batteries can cause electric shock and high short-circuit current. When using batteries, please note the following:

a. Remove any metal objects like watches and rings.
b. Use tools with insulated handles and wear rubber gloves and boots.
c. Prevent metal objects or conductive liquids from contacting battery terminals or enclosures.
d. Do not place tools or metal parts on top of the battery.
e. Disconnect the charging power source before connecting or disconnecting battery terminals.

1.6 Transportation Requirements

All components of the EP2000 energy storage system leave the factory in optimum electrical and mechanical state. It's necessary to use original or appropriate packaging to ensure the product safety during transportation. When you receive the product, inspect for any kind of damage and note the damage on the delivery receipt. The shipping company will be responsible for any damage or loss of the product during transportation. If necessary, please contact us for further assistance.

1.7 Storage Requirements

- When not using the EP2000 for extended periods of time, power it off and remove all electrical connections.
- Charge the system to 40%-60% SoC before storage.
- In order to keep the battery healthy, fully charge and discharge the system every 3 months.
- Store the system in a well-ventilated and spacious area.
- Do not store the system in flammable or explosive environments.
- It is recommended to clean the surface frequently with a dry soft cloth.
- Keep the system out of the reach of children and pets.
- Do not stack anything on top of the equipment during storage.
- Avoid exposing the equipment to rain, humidity or direct sunlight.
- For details of storage temperature, please refer to Chapter 11. Specifications.

1.8 Handling Requirements

Recommended Number of People Based on the Weight of Product

Weight	Number of people
<18kg (39.7lbs)	1
18kg-32kg (39.7lbs-70.5lbs)	2
32kg- 55kg (70.51bs-121.31bs)	3
>55kg (121.3lbs)	4 or a cart

1.9 Label Description

Label	Name	Description
	Discharge delay	There is still residual voltage after the equipment is powered off. Wait 30 minutes for complete discharge before performing maintenance.
	High temperature	This equipment generates heat during operation and may remain hot even after being turned off. Be cautious of hot areas around and near the device, and use appropriate heat protection.
	Grounding	Grounding terminal
	Electrical shock warning	High voltage is present during operation. All operations on the equipment must be carried out by qualified and authorized personnel.
	Warning	Hazards may occur during operation. Take necessary precautions.
	Read manual	Read the manual carefully before operating the equipment.
	This side up	Handle, transport, and store in this orientation at all times. The arrow should always point upwards.



Attention

Follow these guidelines for proper operation:

- The symbols on the box contain important information for safe operation.
- The nameplate on the side of the box contains important parameter information related to the product.

2. EP2000 Energy Storage System

2.1 Introduction

The EP2000 energy storage system consists of an EP2000 inverter, an HV800 battery controller, B700 battery packs, an EMS controller, and additional components like smart meters, circuit breaker, transfer switch, cables, etc. It seamlessly integrates with solar panels and home main panel to provide a complete home energy storage and grid-connected solar power solution.

With smart power generation and uninterruptible power supply features, the system is suitable for homes and regions facing energy shortages or unstable power supply. Monitor and control it with a dedicated app for easy and practical power management.

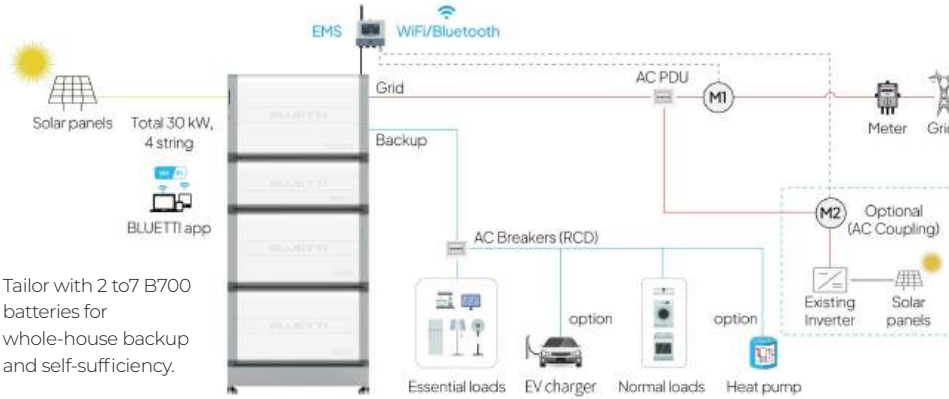

Tailor with 2 to7 B700 batteries for whole-house backup and self-sufficiency.

Note: While multiple EP2000 inverters can be connected in parallel, please note that these configurations have not been tested to comply with AS/NZS 4777.2:2020 standards for multi-phase inverter combinations in Australia. Therefore, we recommend not using such combinations, or alternatively, ensure that external devices are employed in accordance with AS/NZS 4777.1 requirements.

Component	Description	Note
EP2000 inverter	PV grid-tied inverter	Please refer to Chapter 3. EP2000 Inverter for details.
HV800 battery controller	Monitors real-time voltage, current, and temperature during operation of each B700 battery pack.	Please refer to Chapter 4. B5000 Battery Energy Storage System for details
B700 battery pack	$LiFePO_4$ battery pack to power the EP2000.	
EMS controller	Monitors EP2000's operations.	Please refer to Chapter 5. EMS Controller for details.
BLUETTI app	Communicates with the EP2000 inverter via Bluetooth for nearby control or WiFi for remote access.	Please refer to the *EP2000 Energy Storage System App User Manual* for details.
Smart meter 1	Manages anti-backflow and energy usage within the system.	/
Smart meter 2	Facilitates AC coupling.	Optional
Circuit breaker	Protects grid-connected circuits.	/
Transfer switch	Allows for service bypass circuit when needed.	Optional

2.2 Working Modes

The EP2000 provides four working modes that users can select based on their setup and preferences.

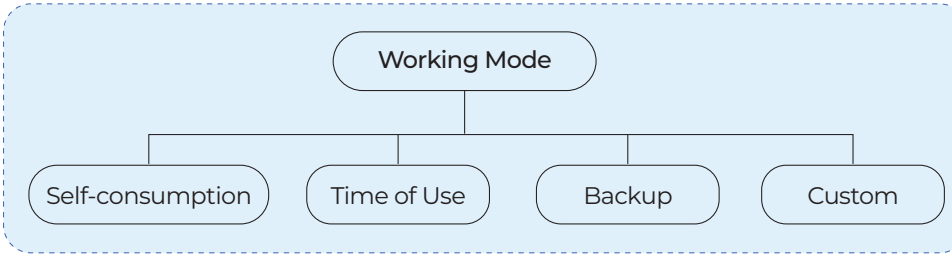

Instruction

The introduction highlights the key features and components of the EP2000. Users can set working modes using the BLUETTI app.

2.2.1 Self-consumption Mode

The EP2000 operates by default in a mode that prioritizes using solar energy directly to meet immediate household needs. Any surplus solar energy generated is intelligently stored in battery packs for use during peak hours or in case of a power outage. This approach ensures a reliable and efficient power supply, reducing dependence on the grid and promoting energy independence.

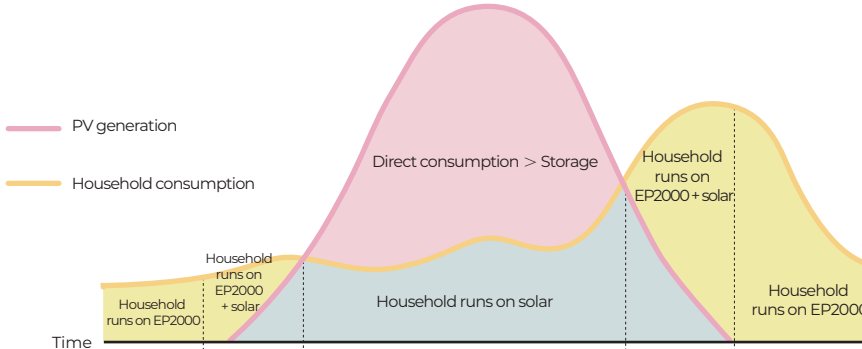

	Midnight	Morning	Noon	Afternoon	Evening
EP2000 Operation	Discharging	Discharging	Charging	Discharging	Discharging
Load Power	EP2000	EP2000 + Solar	Solar	EP2000 + Solar	EP2000
Solar Used	/	Loads	Loads + battery packs	Loads	/

2.2.2 Time of Use Mode

Optimized for regions with varying electricity costs and a reliable power grid, this mode allows users to customize charging schedules. When electricity rates peak, set the system to discharge, using solar and battery power to meet energy needs. In low-rate periods, schedule the grid to charge the battery packs while using the solar and grid power to supply the needs. Users can also adjust State of Charge (SoC) limits to manage grid power use by the EP2000 while preserving battery capacity for solar energy. In off-grid scenarios, rely on solar and battery power to sustain the load.

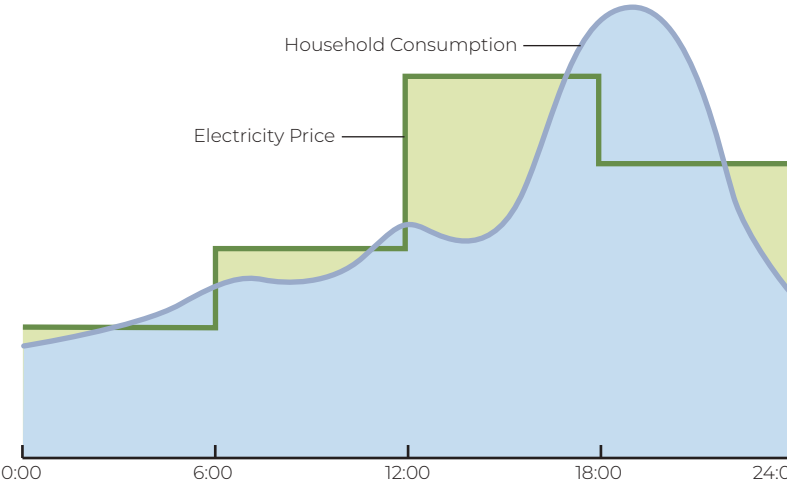

Period	Charge	Discharge	Discharge	Discharge
Load Power	Grid	EP2000 or EP2000 + Solar	EP2000 or EP2000 + Solar	EP2000

2.2.3 Backup Mode

In this mode, the EP2000 acts as a reliable home backup power source that only kicks in when the grid fails. It prioritizes the use of solar energy over the grid to charge batteries, making it an environmentally friendly and sustainable choice for home energy plans. With ample energy reserves, it provides a seamless power supply, perfect for areas with unreliable grids.

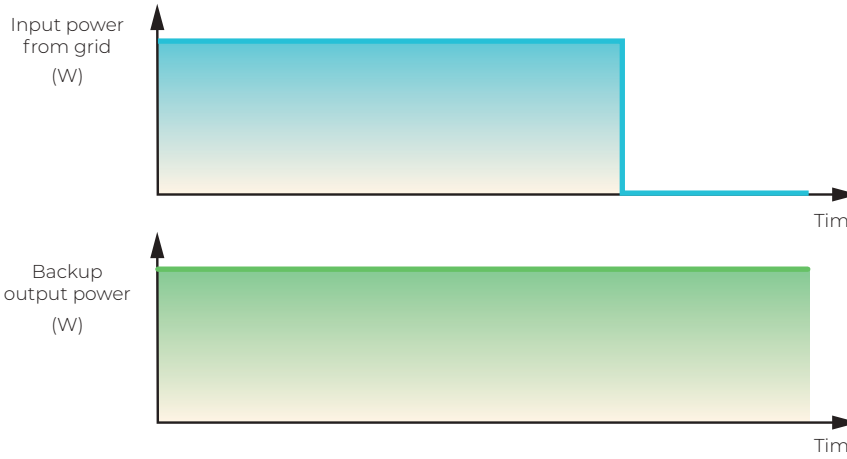

2.2.4 Custom Mode

In this mode, users can customize all of the above mode settings to their preferences.

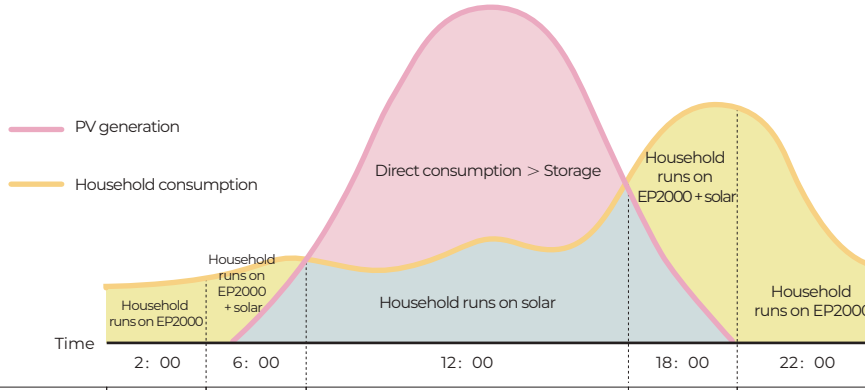

Period	Charge	Discharge	Standby	Discharge	Standby
EP2000 Operation	Charging	Discharging	Discharging	Discharging	Discharging
Solar Used	/	Battery packs	Loads + battery packs	Battery packs	/
Load Power	Grid	EP2000 + Solar	EP2000 + Solar	EP2000 + Solar	EP2000

3. EP2000 Inverter

EP2000 inverter serves as a versatile PV grid-tied component essential to energy storage systems.

3.1 Overview

3.1.1 Appearance

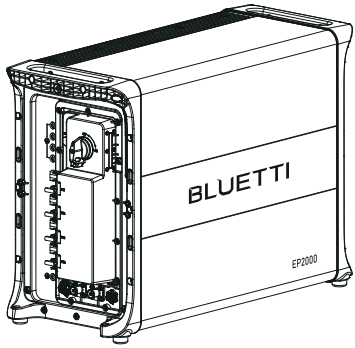	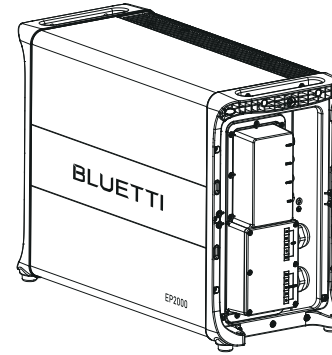
Left	Right

3.1.2 Dimensions

(Unit: mm/in)

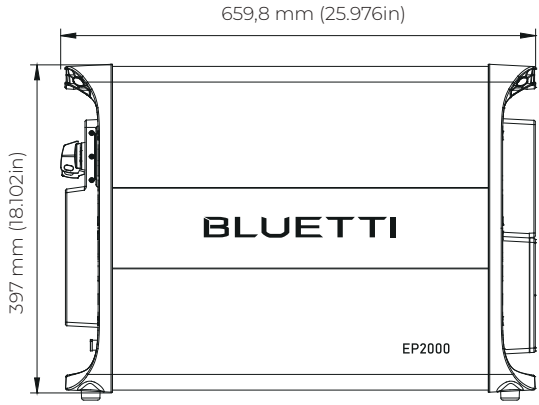	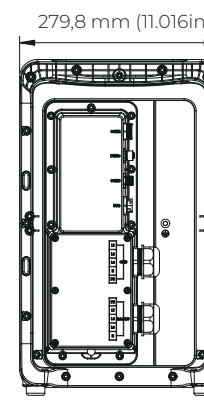
Front	Right

3.1.3 Interfaces

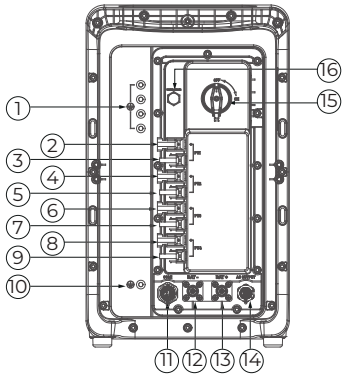

Left

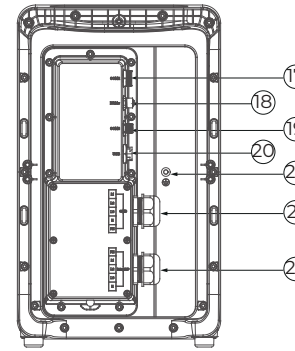

Right

No.	Name	Decisive Voltage Classification	No.	Name	Decisive Voltage Classification
1	Grounding Terminals (To PV)	Not applicable	12	BAT- Terminal	DVC-C
2	PV1+ Input	DVC-C	13	BAT+ Terminal	DVC-C
3	PV1- Input	DVC-C	14	AC Output	DVC-C
4	PV2+ Input	DVC-C	15	PV Input Switch	Not applicable
5	PV2- Input	DVC-C	16	Bleed Valve	Not applicable
6	PV3+ Input	DVC-C	17	COM2 Port	DVC-A
7	PV3- Input	DVC-C	18	DRMs Port	DVC-A
8	PV4+ Input	DVC-C	19	COM3 Port	DVC-A
9	PV4- Input	DVC-C	20	USB Port	DVC-A
10	Grounding Terminal (To HV800)	Not applicable	21	GRID Block	DVC-C
11	COM1 Port	DVC-A	22	BACKUP Block	DVC-C
			23	System Grounding Terminal	Not applicable

3.2 LED Indicators



Situation	Run	Alarm	Fault
Normal	ON	/	/
Alarm	ON	ON	/
Fault	/	/	ON
Alarm and fault	/	ON	ON

3.3 Buzzer Alarm

When an error occurs, the corresponding indicator lights and the buzzer sounds for 5 seconds, pauses for 1 second, and repeats this pattern 5 times. Check the error message on the BLUETTI app.

Note: The buzzer alarm can be turned off in the BLUETTI app.

Error Code	Description
B008	Hardware Inverter Overcurrent
B026	Hardware PV1 Failure
B027	Hardware PV2 Failure
B029	GFCI Hardware Circuit Failure
B034	Hardware Input Overcurrent

3.4 Maintenance and Care

	Warning
	Follow these guidelines for proper operation.

Always power off the system before performing maintenance tasks such as cleaning, checking electrical connections, and ensuring proper grounding. The EP2000 inverter requires regular maintenance, including:

- Inspect and clean the fan, fan guard, and heat sink if dust or blockages are present.
- Ensure that the fan operates without any abnormal noise.
- Check and tighten AC and DC cable connections annually using a torque wrench.

4. B5000 Battery Energy Storage System

4.1 Introduction

The B5000 battery energy storage system (BESS) is designed for residential and small businesses. It includes an HV800 battery controller and 2-7 B700 battery packs connected in series, each with a capacity of 7,37 kWh.

As the control module, the HV800 monitors real-time voltage, current, and temperature for each B700 battery pack during charging and discharging. It also provides protection against overvoltage, undervoltage, overcurrent, overtemperature, and undertemperature, ensuring exceptional safety and stability.

4.2 Overview

Choose from the following setups, which range from 2 to 7 B700 battery packs:

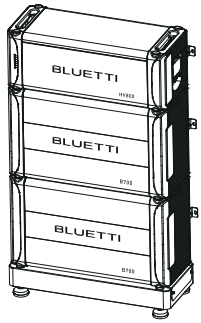	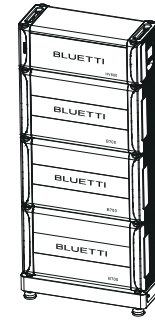
B5000-2S	B5000-3S
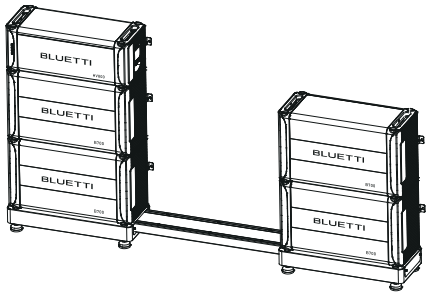	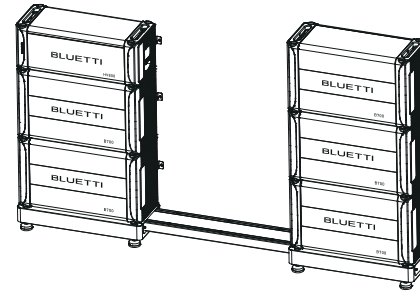
B5000-4S	B5000-5S

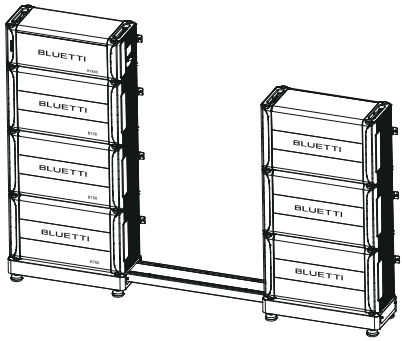	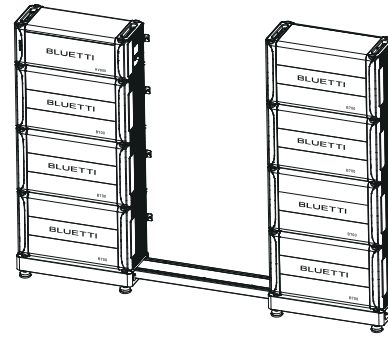
B5000-6S	B5000-7S

Each setup corresponds to the number of B700 battery packs employed, providing scalability and efficiency for residential and small business applications.

4.2.1 HV800 Battery Controller

Appearance

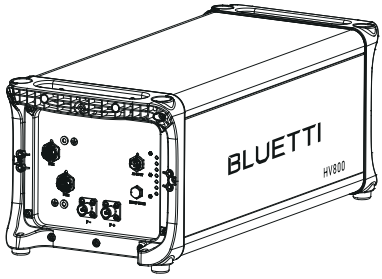	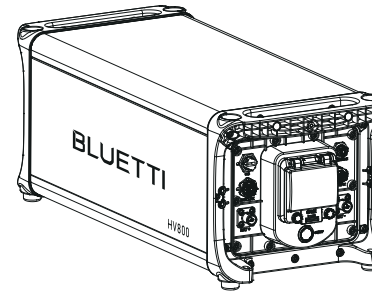
Left	Right

Dimensions

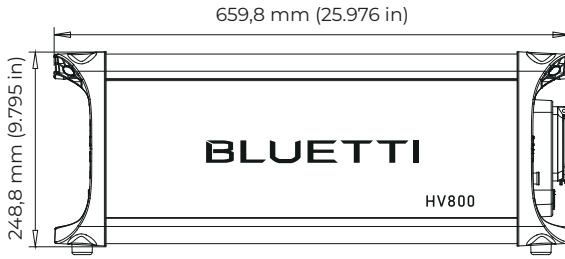	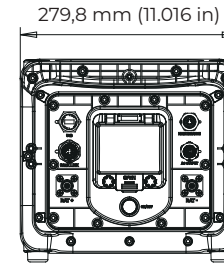
Front	Right

Interfaces

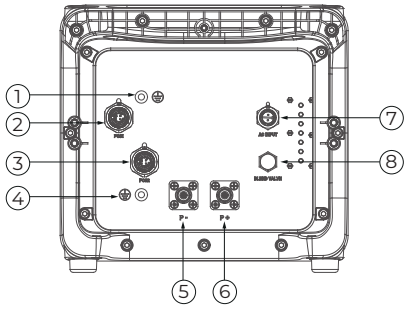

Left

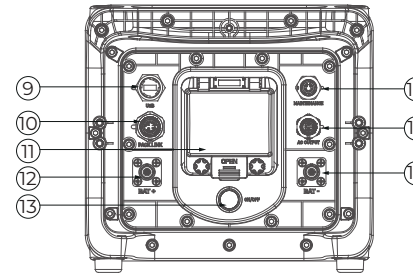

Right

No.	Name	Decisive Voltage Classification	No.	Name	Decisive Voltage Classification
1	Grounding Terminal 1	Not applicable	9	Reserved Port	DVC-B
2	EP2000 COM Port	DVC-A	10	Battery Signal Port	DVC-B
3	Third-party Inverter COM Port	DVC-A	11	Circuit Breaker	Not applicable
4	Grounding Terminal 2	Not applicable	12	BAT+ Terminal	DVC-C
5	Negative Terminal (To PCS)	DVC-C	13	Power Button	Not applicable
6	Positive Terminal (To PCS)	DVC-C	14	Reserved Port	DVC-B
7	AC Input (To PCS)	DVC-C	15	AC Output (To Battery)	DVC-C
8	Bleed Valve	Not applicable	16	BAT- Terminal	DVC-C



Front

No.	Name
17	SoC Indicators
18	High Voltage Power-on Indicator
19	Low Voltage Power-on Indicator

4.2.2 B700 Battery

Appearance

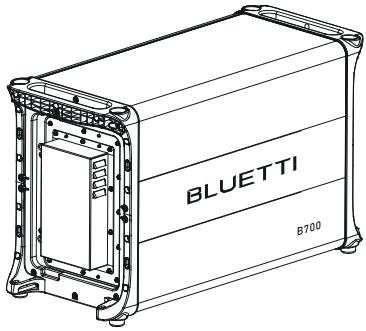

Left

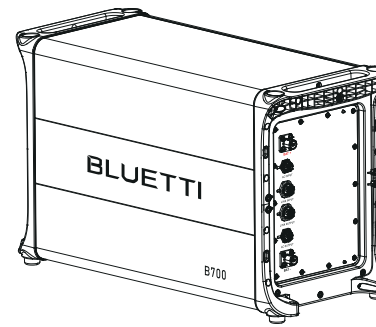

Right

Dimensions

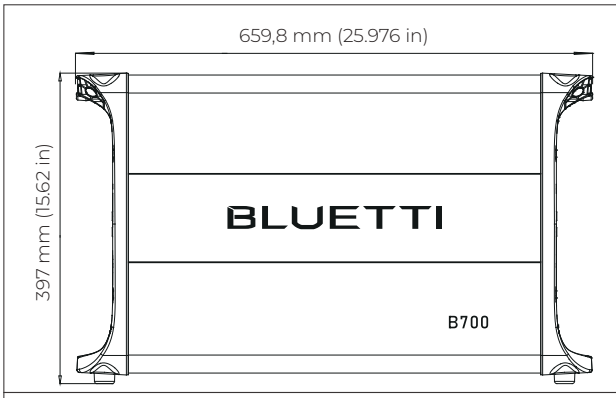

Front

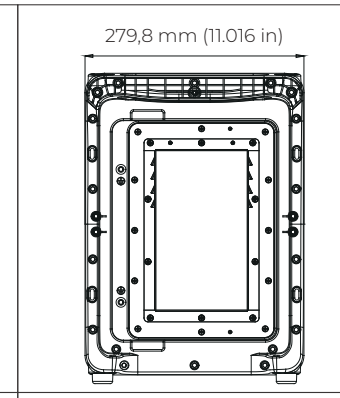

Right

Interfaces

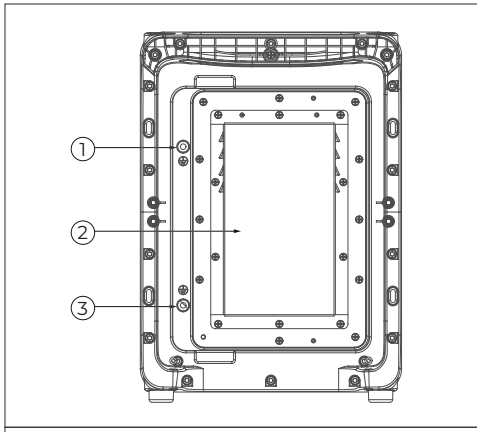

Left

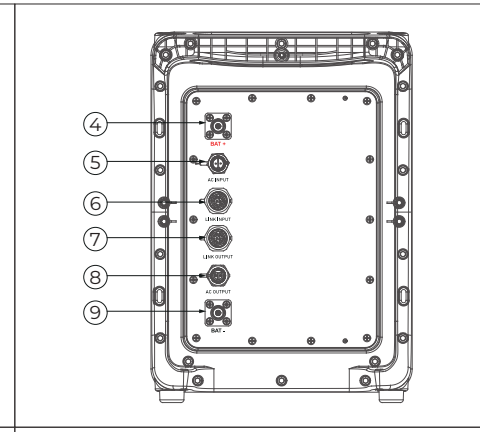

Right

No.	Name	Decisive Voltage Classification	No.	Name	Decisive Voltage Classification
1	Grounding Terminal 1	Not applicable	4	BAT+ Terminal	DVC-C
2	Bleed Valve protective housing	Not applicable	5	AC Input	DVC-C
3	Grounding Terminal 2	Not applicable	6	Pack LINK INPUT	DVC-B
			7	Pack LINK OUTPUT	DVC-B
			8	AC Output	DVC-C
			9	BAT- Terminal	DVC-C

4.3 Status of Indicators

4.3.1 Power Button

Status	Description	Note
Off	B5000 BESS shutdown	HV800 circuit breaker can be operated.
Steady	B5000 BESS operating	HV800 circuit breaker cannot be operated.
Flashes once every 2s	Self-check before powering on	
Flashes once every 0.5s	Powering off	

4.3.2 HV ON Indicator

Status	Description	Note
Off	B5000's high-voltage system not activated	/
Steady	B5000's high-voltage system operating normally	HV800 circuit breaker cannot be operated.
Flashes once every second	B5000's high-voltage system has a charging/discharging fault	

4.3.3 SoC Indicators

- Each lit indicator represents 20% SoC.
- All indicators remain steady when fully charged and go off when fully discharged.
- Flashing indicators show the charging progress.

4.4 System Maintenance

- If the HV ON indicator flashes, please contact BLUETTI support or your local BLUETTI dealers.
- To avoid abnormal operation, do not disconnect the HV800 circuit breaker while the B5000 is in normal operation.
- Do not disassemble the metal enclosure of the B5000 system to prevent electric shock or explosion hazards.

	Instruction
	For details, please refer to the B5000 Battery Energy Storage System manual.

5. EMS Controller

5.1 Communication Principle

The EMS controller supports WiFi and Bluetooth communication, allowing users to monitor the EP2000's operating status via the app. Everything about the system, including power generation and consumption, and alarms, can be uploaded to the BLUETTI server via the WiFi network.

Note: Users need to register a BLUETTI account and scan the EP2000's QR code to bind the system.

The EMS controller supports the following communication methods:

Communication	Note
WiFi	Standard
Bluetooth	Standard

5.2 Key Features and Interfaces

- Control the local parallel connection of up to 3 inverters and monitor them remotely.
- Intelligently balance loads, optimize battery usage, and make the most of solar energy across up to 3 inverters.

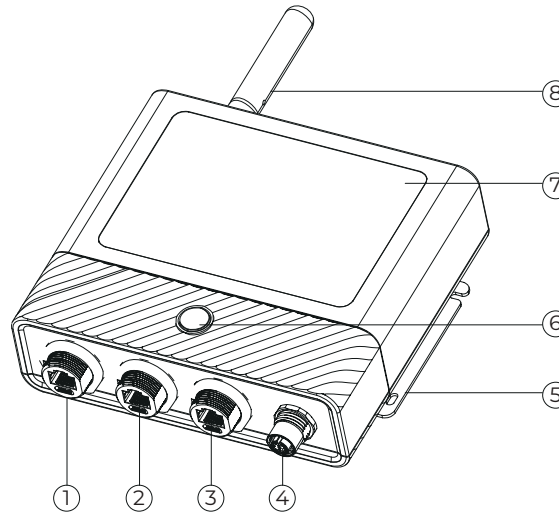

No.	Name	Description
1-3	PCS Port 1-3	Connects to COM2 ports on up to 3 EP2000 inverters or other devices.
4	Multi-use Port	For RS485 communication with third-party meters and charging stations, as well as external ATS control. Ensure the connected meter meets the inverter's requirements.
5	Bracket	For mounting the EMS controller on the wall. Pre-assembled with the EMS controller. Remove it before installing the EMS controller.
6	Alarm Indicator / HOME Button	Steady Green: Normal operation Steady Yellow: Minor alarm Steady Red: Severe alarm Off: Power off During normal operation, press to access the homepage.
7	Touch Screen	View EMS controller status, energy settings, and more.
8	Antenna	For internal WiFi and Bluetooth signal transmission and reception.

Definitions for PCS Ports 1-3

PCS Connector	Function	Description
1	GND	Reference ground for power input
2	9 V-15 VDC	9 V-15 VDC power input
3	CANH	For communication with PCS and BMS
4	CANL	
5	PCS_CANH	For parallel connection of PCS units
6	PCS_CANL	
7	PCS_485A+	
8	PCS_485B-	

Attention: PCS ports 1-3 are RJ45 ports. Do not connect Ethernet cables or other device cables to avoid damage to the equipment.

Definitions for RJ45 Connection Cable

RJ45 Connector (EMS Controller)	Function	9-pin Connector (Inverter)	Description
1	GND	1	Reference ground for power input
2	9 V-15 VDC	2	9 V-15 VDC power input
/	/	3	NC
3	CANH	4	For communication with PCS and BMS
4	CANL	5	
5	PCS_CANH	6	For parallel connection of PCS units
6	PCS_CANL	7	
7	PCS_485A+	8	
8	PCS_485B-	9	

Definitions for Multi-use Port

Connector	Function	Description	Note
1	RS485-B2	Charging station RS485 communication	Connects to RS485-B-
2	RS485-A2		Connects to RS485-A+
3	RS485-B1	Meter RS485 communication	Connects to grid meter and AC PV meter RS485-B-
4	RS485-A1		Connects to grid meter and AC PV meter RS485-A+
5	GND	I/O reference ground	For both 9 V-15 VDC output and DRMs input
6	EXT_IN	DRMs input	Signal input
7	9 V-15 VDC	9 V-15 VDC/0.2 A output	Power supply for ATS control
8	GEN_NO	SPDT relay NO terminal	I/O control for ATS

Attention: The multi-use port requires enhanced insulation.

5.3 Installation

	Danger
	Make sure to check for any cables or pipes before drilling into the wall.

For a strong and uninterrupted wireless signal, install the EMS controller in an open area, away from obstructions. Keep it close to the home WiFi router.

Do not place the controller near walls made of steel-reinforced concrete or metal, as these materials can disrupt both WiFi and Bluetooth signals.

1. Remove the screws from the top of the bracket.

2. Drill 4 holes in the wall with an electric drill (5 mm/0.2 in). The depth of the holes is 26 mm (1.02 in).

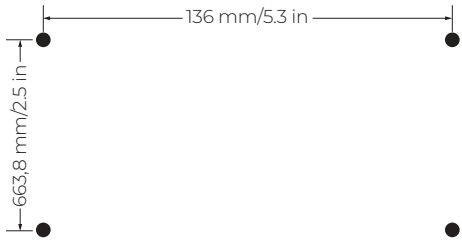

3. Put the bracket back on and snap the controller into position.

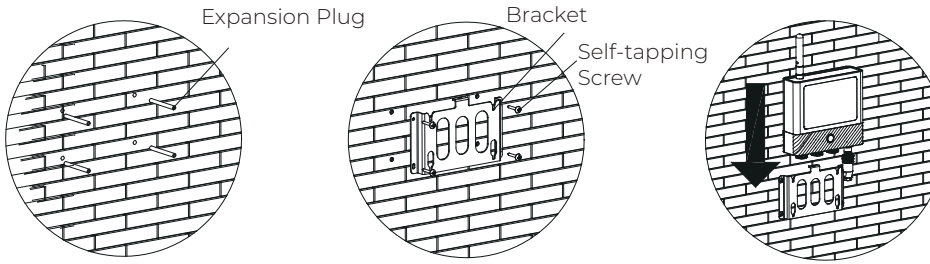

4. Secure the EMS controller using the screws removed in step 1.

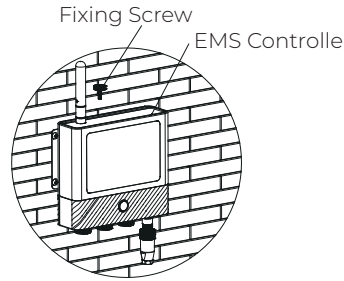

5.4 Safety Instructions

- The EMS controller is ONLY applicable to BLUETTI products.
- Only authorized personnel should handle the internal component replacements. No end-user serviceable components available.

	Warning
	Follow these guidelines for proper operation.

- Do not insert foreign objects into any ports of the product.
- Keep the product out of reach of children.

5.5 Connection and Operations

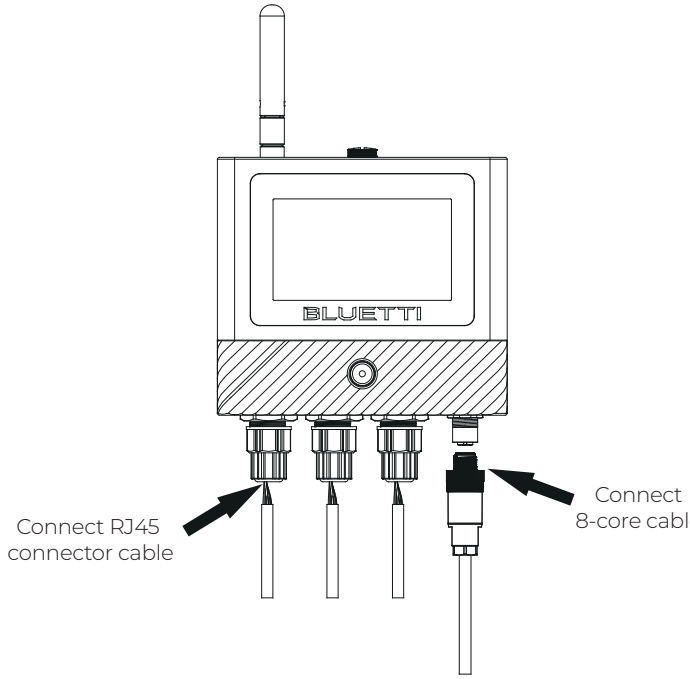

Connecting 8-core cable:

Step 1: Prepare an 8-core cable (recommended: UL2238, 24AWG) of the appropriate length.

Step 2: Twist off the end cap of the 8-core cable.

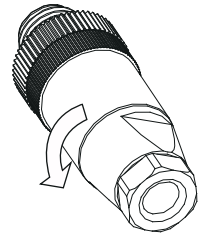

Step 3: Pass the 8-core cable through the cap. Loosen the terminal screw. Refer to the 8-core terminal sequence in the table, insert the cores accordingly, and tighten the screw.

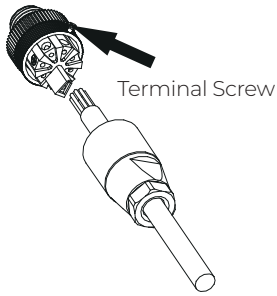

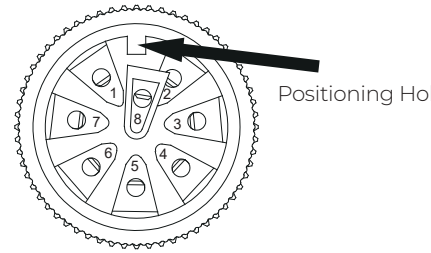

Connector	Function	Description	Note	Reference Diagram
1	RS485-B2	Charging station RS485 communication	Connects to RS485-B-	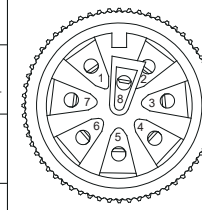
2	RS485-A2		Connects to RS485-A+	
3	RS485-B1	Meter RS485 communication	Connects to grid meter and AC PV meter RS485-B-	
4	RS485-A1		Connects to grid meter and AC PV meter RS485-A+	
5	GND	I/O reference ground	For both 9 V-15 VDC output and DRMs input	
6	EXT_IN	DRMs input	Signal input	
7	9 V-15 VDC	9 V-15 VDC/0.2 A output	Power supply for ATS control	
8	GEN_NO	SPDT relay NO terminal	I/O control for ATS	

Step 4: Twist the cap back into place.

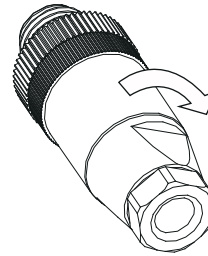

Step 5: Align the 8-core connector with the multi-use port and tighten it up.

Connecting RJ45 connector cable:

Step 1: Prepare an Ethernet cable of the appropriate length.

Step 2: Refer to the table below, and pass through the Ethernet cable through the cap.

Use a crimping tool to properly crimp one end of the cable.

Pin	Function	Colour	Description	Reference Diagram
1	GND	Solid Brown	Reference ground for power input	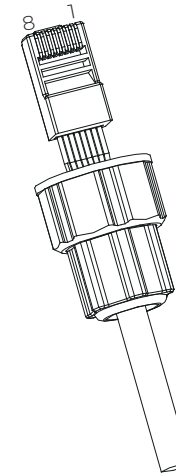
2	9 V-15 VDC	Brown White	9 V-15 VDC power input	
3	CANH	Solid Green	For communication with PCS and BMS	
4	CANL	Blue White		
5	PCS_CANH	Solid Blue	For parallel connection of PCS units	
6	PCS_CANL	Green White		
7	PCS_485A+	Solid Orange		
8	PCS_485B-	Orange White		

Step 3: Repeat the above steps to crimp the other end of the cable.

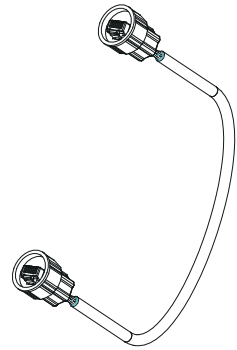

Step 4: Connect one end of the Ethernet cable to the PCS port, and twist up the cap. The other end of the cable serves as an inverter parallel terminal. Connect it to the inverter using an RJ45 connection cable.

Note: Connections vary on a case-by-case basis.

Safely secure the end cap when the PCS port is not in use.

	Instruction
	Please refer to the user manual for details regarding the EMS controller.

6. System Installation

	Danger
	Disconnect all electrical connections from the equipment. Do not install the equipment below pipes, windows, or areas prone to water leaks and accumulation.
	Warning
	Do not block ventilation openings or heat dissipation pathways while operating to prevent overheating and fire risks.
	Caution
	When moving the equipment, be mindful of its weight and balance. Take care to avoid tipping or dropping it, as that could result in damage to the equipment or injury.

6.1 EP2000 Packing List

No.	Picture	Description	Qty.
1	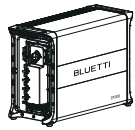	EP2000 inverter	1
2		Left cover	1
3	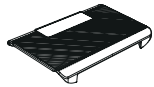	Right cover	1
4		Handle seal strip	2
5		Negative power cable (HV800 to EP2000)	1
6		Positive power cable (HV800 to EP2000)	1

No.	Picture	Description	Qty.
7		AC power cable (HV800 to EP2000)	1
8		COM1 cable (HV800 to EP2000)	1
9		Grounding cable (HV800 to EP2000)	1
10		Network cable	1
11		RNB14-6S OT terminal (for enclosure grounding)	1
12		RNB3.5-6 OT terminal (for PV grounding)	4
13	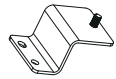	Bracket #1	2
14	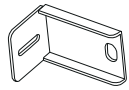	Bracket #2	2
15		M12 connector (for connecting DRMs external connections)	1
16		M12 connector (for connecting COM3 external connections)	1
17		RJ45 connector (with crystal head, spare, for connecting COM2 to EMS)	1
18	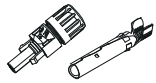	Plastic housing (PV+ Input) Metal core (PV+ Input)	4
19	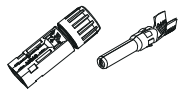	Plastic housing (PV- Input) Metal core (PV- Input)	4

No.	Picture	Description	Qty.
20		MC4 spanner	1
21		Small cross screwdriver (for DRMs and COM3 wiring)	1
22		M4*10 screw (for exterior trim)	2
23		M5*12 screw (for bracket #1)	4
24	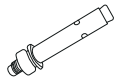	M8*60 expansion bolt (for bracket #2)	2
25		M5 hexagon flange nut (for brackets)	2
26		M6*14 screw (for grounding cable)	6
27		Spare screw kit	1

6.2 HV800 Packing List

No.	Picture	Description	Qty.
1	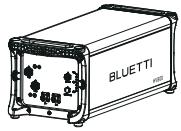	HV800 battery controller	1
2		Left cover	1
3		Right cover	1
4	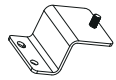	Bracket #1	2
5	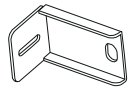	Bracket #2	2
6		M4*10 screw (for covers)	2
7		M5*12 screw (for bracket #1)	4
8	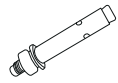	M8*60 expansion bolt (for bracket #2)	2
9		M5 hexagon flange nut (for brackets)	2
10		M6*14 screw (for grounding cable)	2
11		Spare screw kit	1

6.3 B700 Packing List

No.	Picture	Description	Qty.
1	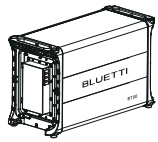	B700 battery pack	1
2		Bracket #1	2
3		Bracket #2	2
4		M5 hex nut	2
5	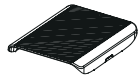	Left cover	1
6		Right cover	1
7		M4*10 screw	2
8		M5*12 screw	4
9	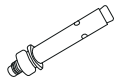	M8*60 expansion bolt (for wall mounting)	2
10		M6*14 screw (for grounding cable)	2
11		Spare screw kit	1

6.4 B5000-2S Packing List

No.	Picture	Description	Qty.
1		Power cable (for battery connection)	1
2		Communication cable	2
3		AC power cable	2
4		Grounding cable	2
5		Power cable (negative, B700 to HV800)	1
6	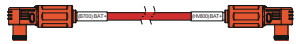	Power cable (positive, B700 to HV800)	1
7	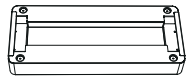	Base	1
8	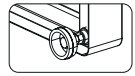	Leveling foot	4

Instruction

Please refer to the *B5000 Battery Energy Storage System User Manual* for packing lists of B5000-3S, B5000-4S, B5000-5S, B5000-6S, and B5000-7S.

6.5 Accessories

No.	Picture	Description	Qty.
1		EMS controller	1
2	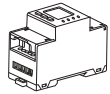	Meter	1
3	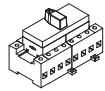	Transfer switch	1

6.6 Installation Requirements

6.6.1 Environment Requirements

- Choose a dry and clean location for installation that has firm ground and avoids clay, soft soil, or sinking areas.
- Do not install the system in low-lying areas prone to water and snow accumulation to prevent water ingress and result in system failure.
- Ensure the installation site is elevated above historical high water levels.
- The EP2000 inverter and the B5000 BESS both can be installed indoors and outdoors. If installed outdoors, use a high-quality shelter or waterproof cover to protect them from direct sunlight and rain for safe and stable operation.
- The enclosure and heat sink are very hot while the inverter is working, therefore do NOT install it in easily accessible locations.
- Keep the EP2000 away from flammable liquids, gases, or explosive materials.
- Keep away from children and pets.
- Do not install the EP2000 outdoors in salt-affected areas, as the accumulation of salt may corrode the system. Salt-affected areas are those within 500 m (1,640.42 ft) from the coast or susceptible to sea breezes. Salt accumulation is influenced by seawater, sea breeze, precipitation, air humidity, topography, and forest cover of adjacent sea areas.
- Install the EP2000 in a well-ventilated and spacious area to ensure good heat dissipation.
- Ambient temperature range: -20°C to 40°C/-4°F to 104°F.
- Relative humidity: 5%-95% (non-condensing).
- Maximum height: 2.000 m/6,561.68 ft.

Attention

If the battery pack is dropped, violently impacted or tilted during installation, it may result in internal damage. So do not use such battery packs to avoid safety risks such as battery leakage and electric shock.

6.6.2 Location Requirements

- Install the EP2000 on a sturdy, flat, and level surface.
- Do not install the system on flammable materials.
- Consider the weight and placement of components to ensure adequate structural support.

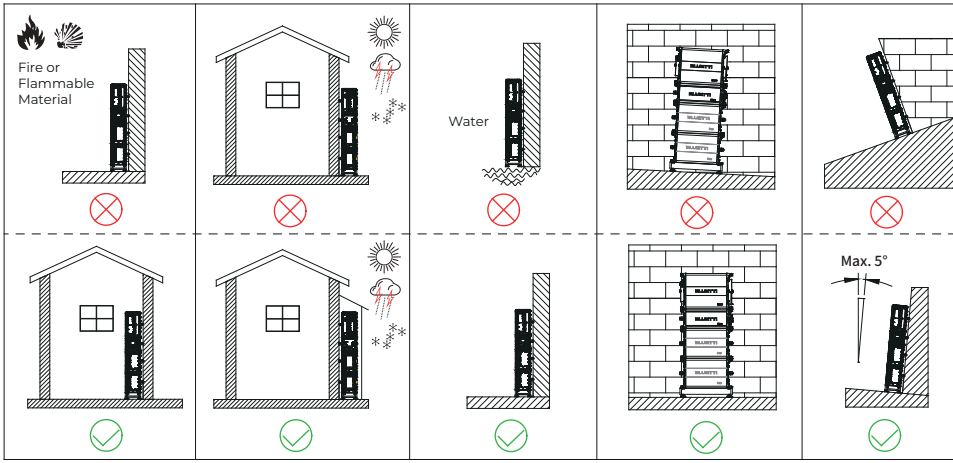

6.6.3 Space Requirements

Danger

Make sure to check for any cables or pipes before drilling into the wall. It's crucial to maintain a minimum 38 mm (1.5 in) gap between the equipment and the wall to facilitate effective heat dissipation and ensure optimal performance. Additionally, avoid placing objects on top of the EP2000 inverter, as it requires ventilation for cooling.

Danger

For safety, secure the product to the wall after stacking.

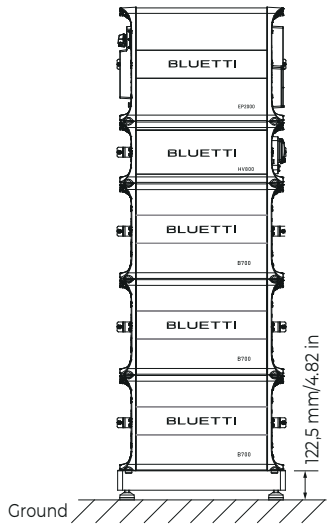
BLUETTI
BLUETTI
BLUETTI
BLUETTI
BLUETTI
122,5 mm/4.82 in
Ground

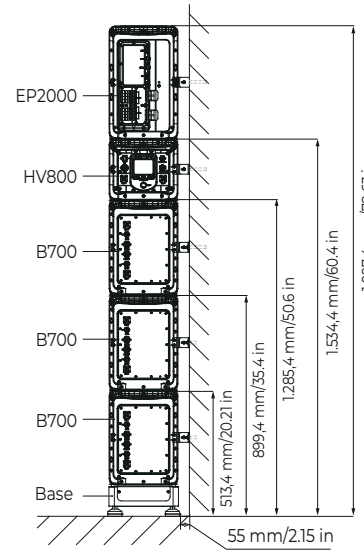
EP2000
HV800
B700
B700
B700
Base
513,4 mm/20.21 in
899,4 mm/35.4 in
1.285,4 mm/50.6 in
1.534,4 mm/60.4 in
1.997,4 mm/78.63 in
55 mm/2.15 in

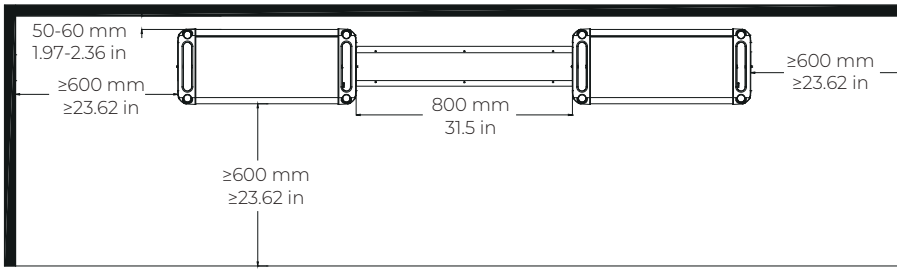
50-60 mm
1.97-2.36 in
≥600 mm
≥23.62 in
800 mm
31.5 in
≥600 mm
≥23.62 in
≥600 mm
≥23.62 in

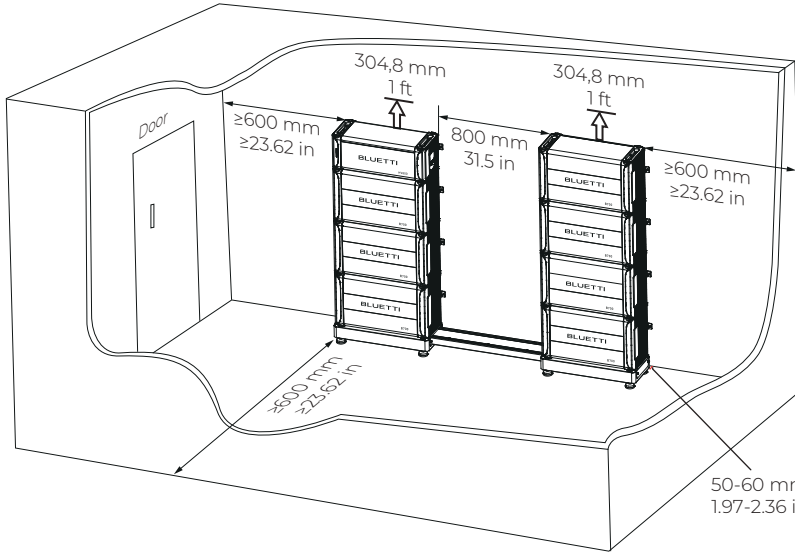
Door
304,8 mm
1 ft
304,8 mm
1 ft
≥600 mm
≥23.62 in
800 mm
31.5 in
≥600 mm
≥23.62 in
≥600 mm
≥23.62 in
50-60 mm
1.97-2.36 in

Hole Positions

1 EP2000 + 1 HV800 + 2 B700

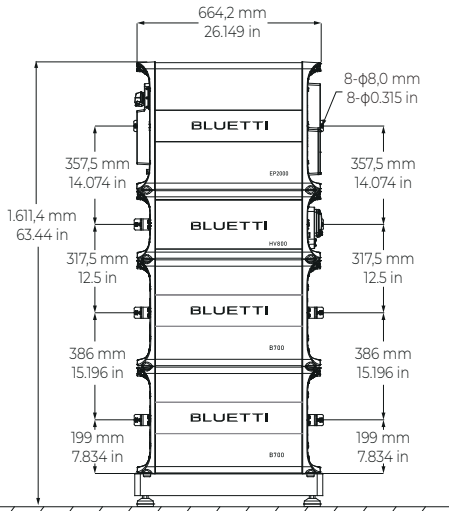

1 EP2000 + 1 HV800 + 3 B700

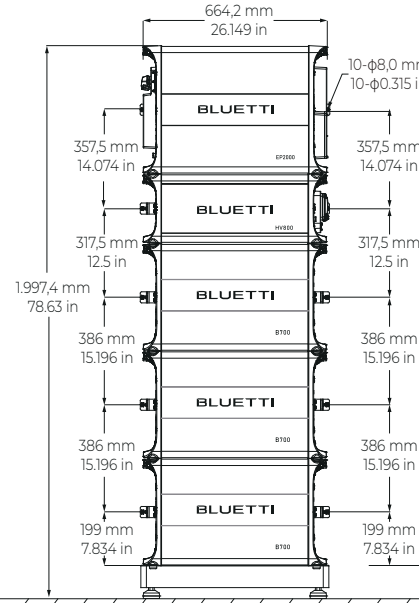

1 EP2000 + 1 HV800 + 4 B700

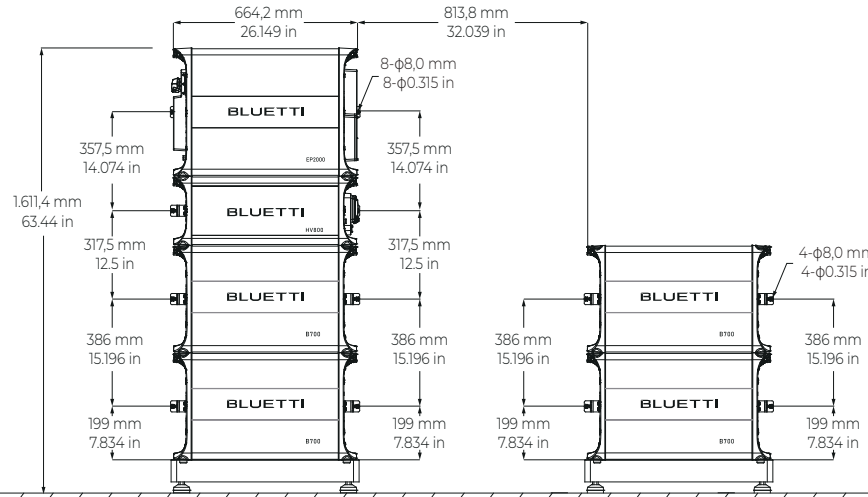

1 EP2000 + 1 HV800 + 5 B700

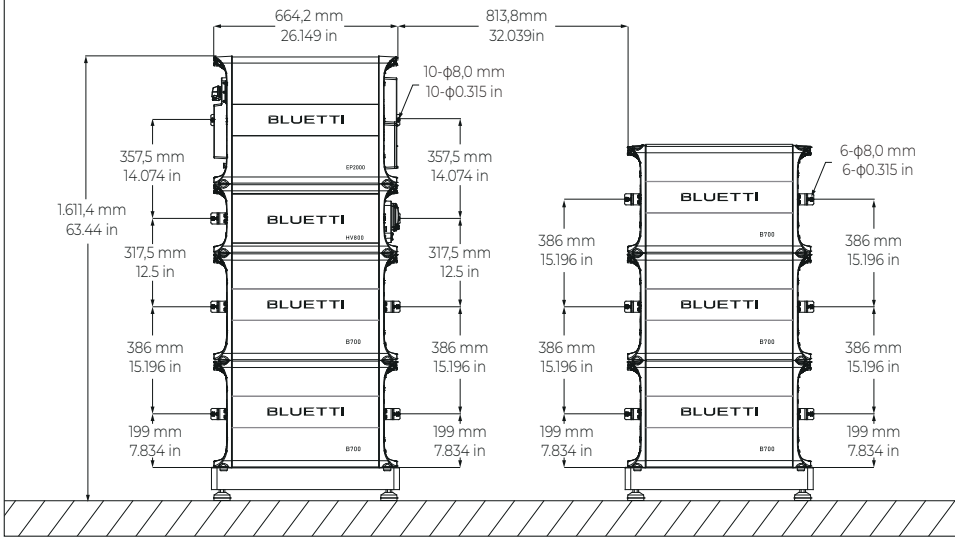

1 EP2000 + 1 HV800 + 6 B700

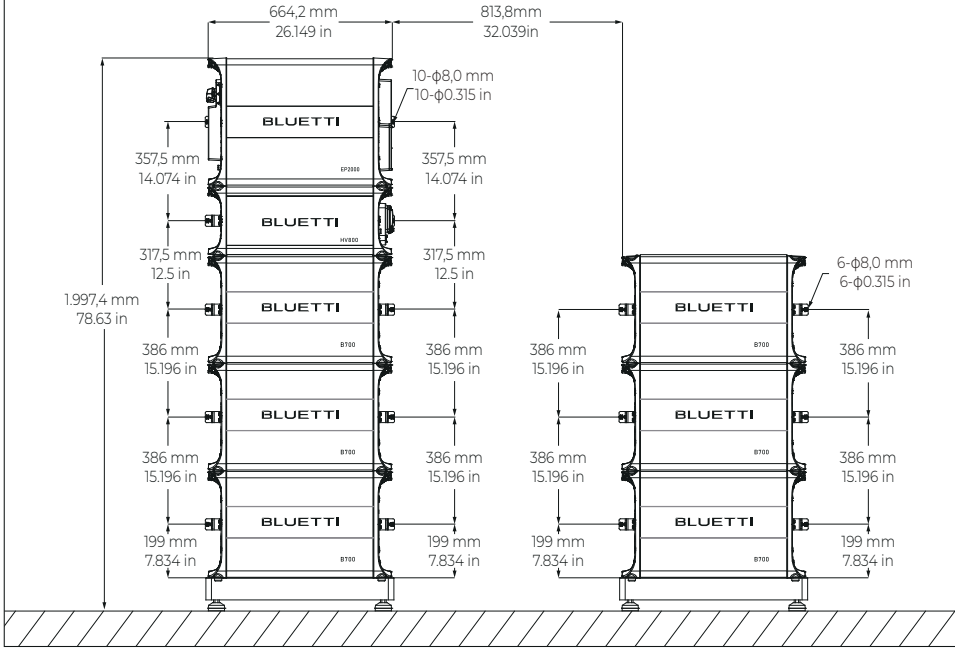

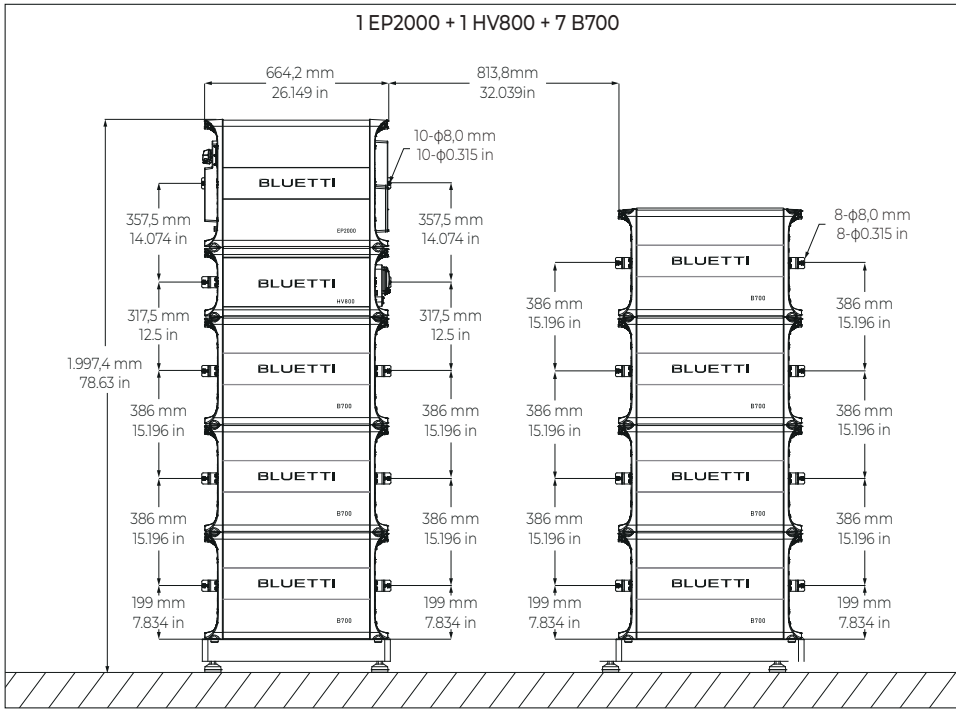

(Unit: mm/in)

Note: Stack up to 5 layers of equipment on the base, including the EP2000 inverter. If using more than 3 B700 batteries, arrange them into two separate stacks with at least a 325 mm (12.79 in) gap. Adjust one set of installation holes for each addition or removal of a battery pack.

6.6.5 Base Dimensions

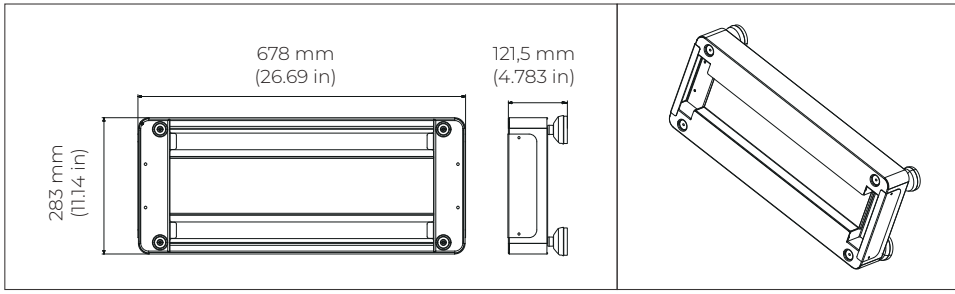

6.7 Prepare the Necessary Tools

No.	Picture	Description
1	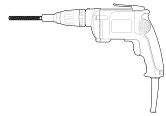	Electric drill (5 mm/0.2 in, 8 mm/0.31 in, 10 mm/0.39 in)
2	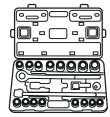	Socket wrench set
3		Torque wrench (42 mm/1.634 in)
4		Flat screwdriver
5	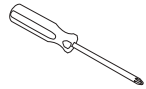	Cross screwdriver (6 mm/0.236 in)
6	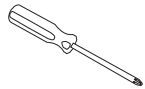	Cross screwdriver (2 mm/0.079 in) (for DRMs/COM3 connector)
7	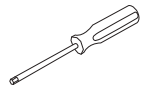	H3 hex screwdriver
8		MC4 spanner
9	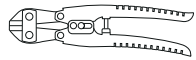	Cable cutter
10	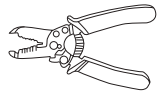	Cable stripper
11		Cable crimper (for PV and OT terminal)
12	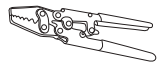	RJ45 crimper0

No.	Picture	Description
13	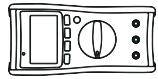	Multimeter (DC voltage ≥ 2.000 VDC)
14		Marker
15	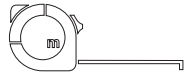	Measuring tape
16	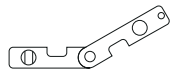	Level ruler
17		Box cutter
18		Heat shrink tubing
19		Heat gun
20	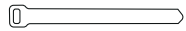	Cable tie
21	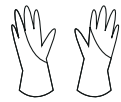	Anti-static gloves
22		Protective goggle
23		Mask
24		Safety-toe shoes
25		Vacuum cleaner

6.8 Installation

Step 1: Place the base on the ground and adjust the height of leveling feet so that the base stands stably on the ground. Don't forget to tighten the nuts to secure the leveling feet.

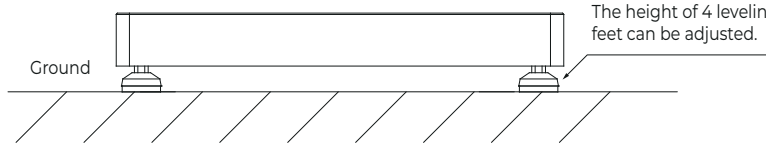

Step 2: Mark the drilling positions with tape and marker. Drill holes with the electric drill and insert M8 expansion bolts.

Step 3: Move the B700 battery pack to the base. Two people are required to transport the B700. Align the bumps on the battery with the notches on the base to secure the battery in place.

Step 4: Fix 2 brackets #1 to two sides of B700 with 4 M5*12 screws. Put the bracket #2 through the compression rivet screw of bracket #1 and M8 expansion bolts. Secure the connection with M8 and M5 nuts.

Step 5: Repeat Steps 3 and 4 to secure all battery packs.

Step 6: Follow the same steps to install the HV800 battery controller above the B700 battery, then install the EP2000 inverter on top.

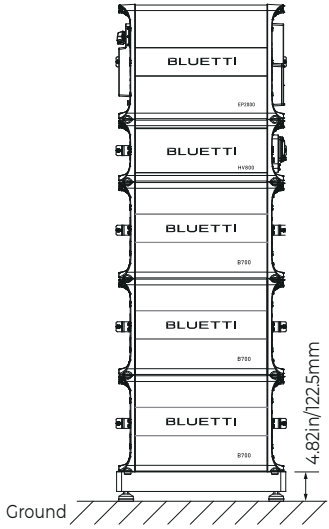

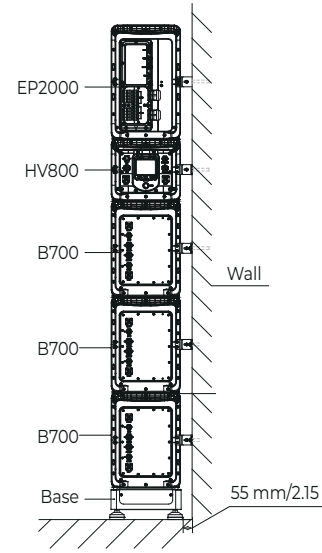

7. Electrical Connection

Before installation or maintenance, make sure both AC and DC sides are powered off. After disconnecting the inverter, wait for 30 minutes to ensure complete discharge, as failure to do so may pose safety risks.



Danger

Before connecting DC electrical components, ensure the DC switches are turned off.



Warning

Only authorized personnel should perform the electrical connection. All cables should be securely connected with proper insulation and meet required standards.
Incorrect wiring may cause damage to the system.



Attention

Only authorized personnel should perform the installation and maintenance. When working with inverters and batteries, wear rubber gloves, safety glasses, safety boots, and other protective clothing.



Instruction

Ensure that the solar panels connected to the EP2000 have an open-circuit voltage not exceeding 1000V at 25°C (77°F) and comply with the IEC61730-1A standard.

Model	PV I_{SC} (Absolute Maximum)	Max. Input Current
EP2000	20 A × 4	15 A × 4

7.1 EP2000 ESS Wiring Diagram

The electrical connections are similar across the B5000-2S to B5000-7S systems. Here's the diagram using the B5000-2S system as an example:

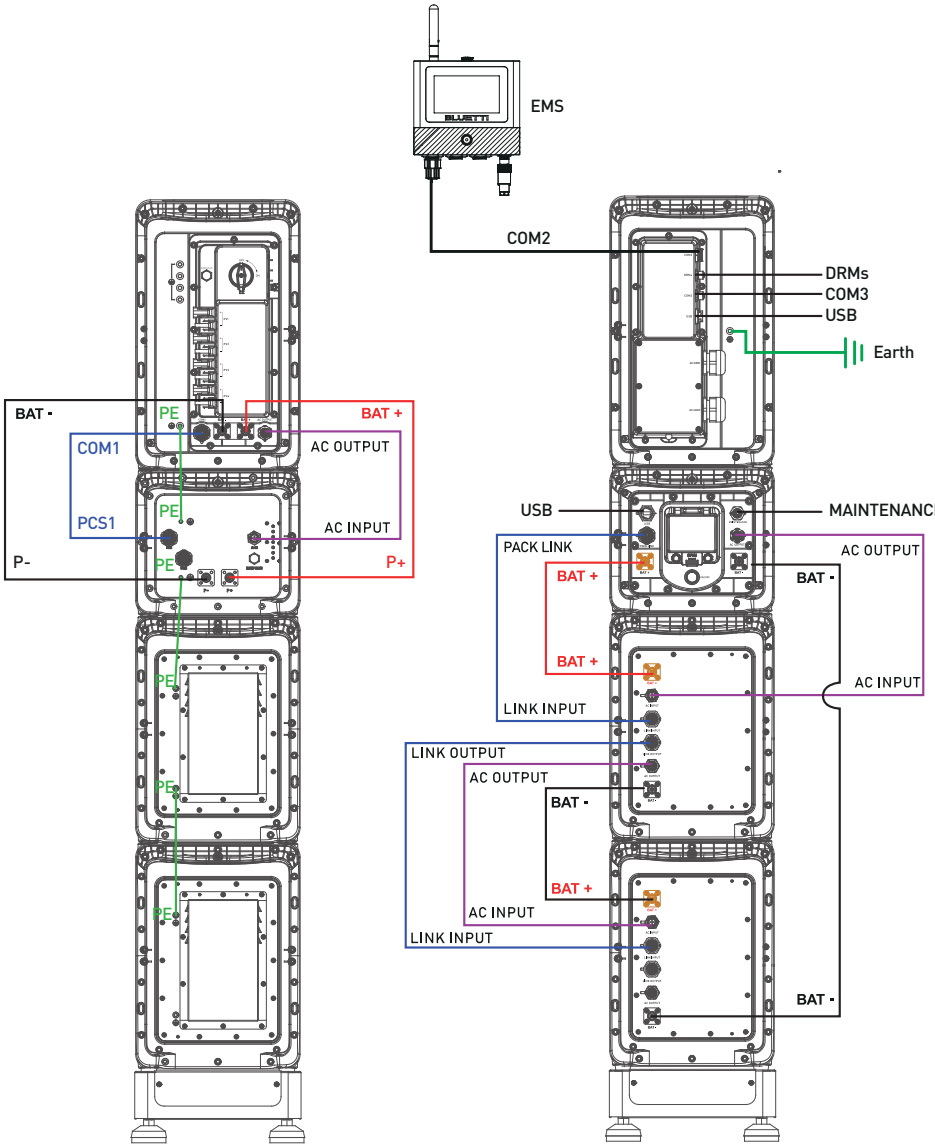

7.2 B5000 BESS Interface Instructions

Interface	Description	Interface	Description
HV800 Battery Signal Port (PACK LINK)	For communication between the HV800 and battery packs. Connect to the LINK INPUT port of the top B700.	HV800 Signal Output Port (PCS1)	For communication between the HV800 and the inverter. Connect to the COM1 port of the inverter.
HV800 Positive Terminal (BAT+)	For communication between the HV800 and the battery pack. Connect to the BAT+ port of the top B700.	HV800 Output Negative (P-)	For communication between the HV800 and the inverter. Connect to the BAT- port of the inverter.
Battery Positive Terminal (BAT+)	For communication between modules. Connect to the BAT- port of the upper battery when multiple B700s are stacked (except for the top B700).	HV800 Output Positive (P+)	For communication between the HV800 and the inverter. Connect to the BAT+ port of the inverter.
Battery Signal Input Port (LINK INPUT)	For communication between modules. Connect to the LINK OUTPUT port of the upper battery when multiple B700s are stacked (except for the top B700).	/	/
Battery Signal Output Port (LINK OUTPUT)	For communication between battery packs. Connect to the LINK INPUT port of the lower battery when multiple B700s are stacked (except for the bottom B700).		
AC Input Port (AC INPUT)	For communication between modules. Connect to the AC OUTPUT port of the upper module.		
AC Output Port (AC OUTPUT)	For communication between modules. Connect to the AC INPUT port of the lower battery when multiple B700s are stacked (except for the bottom B700).		
HV800 Negative Terminal (BAT-)	Connect to the BAT- port of the bottom B700. For B5000-4S to B5000-7S, connect to the BAT- port of the bottom B700 in the stack without HV800.		
Battery Negative Terminal (BAT-)	For communication between modules. Connect to the BAT+ port of the lower battery when multiple B700s are stacked, except for the bottom B700, which connects to the BAT- port of the HV800.		

7.3 EP2000 Inverter Interface Instructions

Terminal	Description		Type of Cable Required	Cable Specs
BAT + 	BAT+: to the HV800's P+ terminal		Standard accessories	/
BAT - 	BAT-: to the HV800's P- terminal		Standard accessories	/
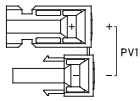	PV1+: to the positive terminal of solar panel PV1-: to the negative terminal of solar panel		Outdoor multi-core copper cable	Conductor cross-sectional area: 2.5mm²-4mm² (7.500 W Max.)
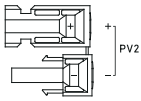	PV2+: to the positive terminal of solar panel PV2-: to the negative terminal of solar panel		Outdoor multi-core copper cable	Conductor cross-sectional area: 2.5mm²-4mm² (7.500 W Max.)
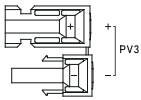	PV3+: to the positive terminal of solar panel PV3-: to the negative terminal of solar panel		Outdoor multi-core copper cable	Conductor cross-sectional area: 2.5mm²-4mm² (7.500 W Max.)
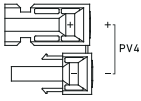	PV4+: to the positive terminal of solar panel PV4-: to the negative terminal of solar panel		Outdoor multi-core copper cable	Conductor cross-sectional area: 2.5mm²-4mm² (7.500 W Max.)
	PV1 G: PV1 grounding PV2 G: PV2 grounding PV3 G: PV3 grounding PV4 G: PV4 grounding		Outdoor multi-core copper cable	Conductor cross-sectional area: 2.5mm²-4mm²
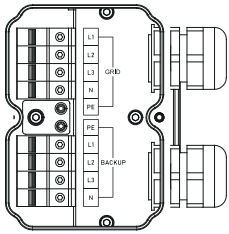	GRID	L1 L2 L3 N PE	Outdoor multi-core copper cable	Cable conductor cross-sectional area: 10mm² (6AWG)
	BACKUP	PE L1 L2 L3 N	Outdoor multi-core copper cable	Cable conductor cross-sectional area: 10mm² (6AWG)

7.4 Preparation

Step 1: Firmly stack the EP2000 ESS and securely mount them on the wall using the brackets.

Step 2: Install the EMS controller on the wall securely.

Step 3: Ensure the PV input switch on the EP2000 inverter, the HV800 circuit breaker, and the main panel switch are all "OFF".

Step 4: Set aside the packing lists for the EP2000 inverter, HV800, and B700 for reference.

7.5 Grounding Cable

	Attention
!	Since the EP2000 inverter is transformerless, it's essential to keep both positive and negative terminals of the solar system ungrounded to prevent inverter malfunctions. Make sure all non-current-carrying metal components, like metal brackets, the distribution box shell, and the inverter, battery controller, and battery pack chassis, are properly grounded. Follow the correct connection sequence in the EP2000 ESS: connect the battery pack enclosure to the battery controller, then to the inverter, and finally, ground the inverter.

Step 1: Prepare the standard grounding cable, RNB14-6S OT terminal, and M6*14 screws, and optional grounding cable (recommended to use 10mm^2 yellow-green outdoor cable).

Step 2: Strip the insulation layer of the optional grounding cable with a cable stripper to a proper length. Insert the exposed core wires into the RNB14-6S OT terminal and crimp them with a crimper.

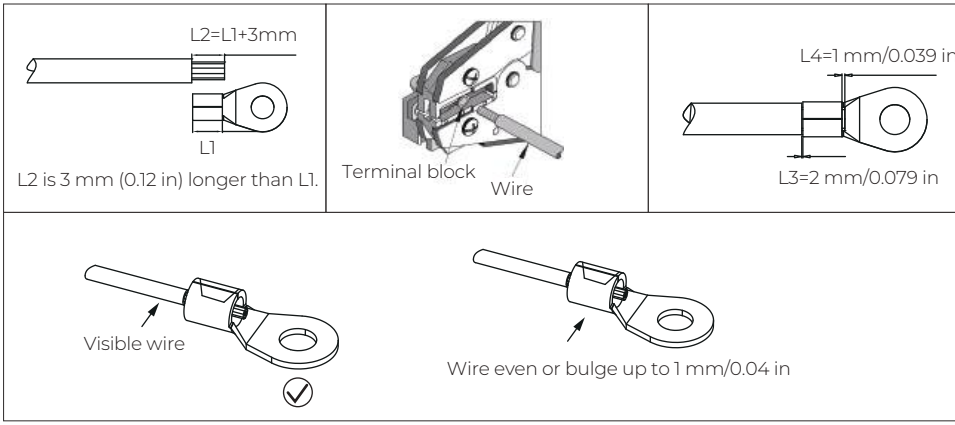

Step 3: Fix the OT terminal with M6*14 screws at the position shown in the figure below. Securely ground the other end of the cable in the favourite way.
Recommended torque: 2 Nm.

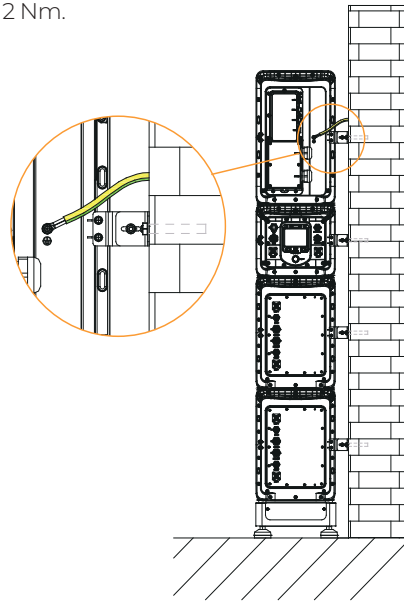

Step 4: Verify the labels on the standard grounding cable connectors, then securely fasten them to the chassis of the EP2000 and HV800 using M6*14 screws, respectively.
Recommended torque: 2 Nm.

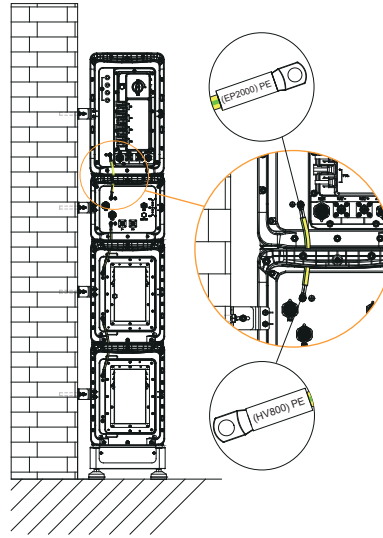

7.6 Power Cable

Step 1: Prepare the negative and positive power cables.

Step 2: Attach the negative power cable to the EP2000's BAT- terminal and the HV800's P- terminal. You should hear a click when it's properly connected.

Step 3: Attach the positive power cable to the EP2000's BAT+ terminal and the HV800's P+ terminal. You should hear a click when it's properly connected.

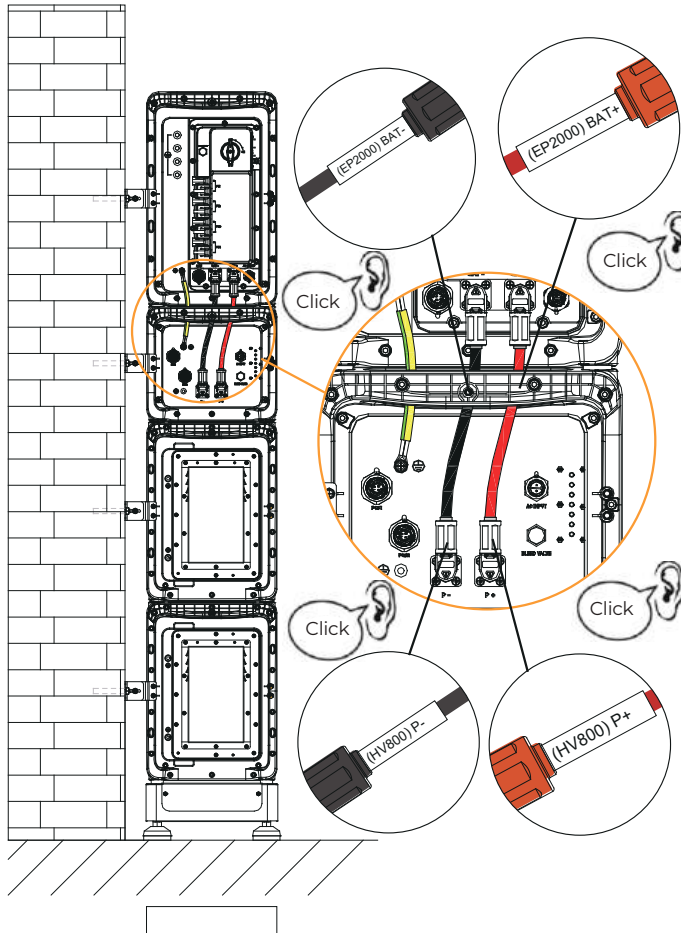

7.7 Communication Cable

Step 1: Prepare the communication cable.

Step 2: Insert the cable into the EP2000's COM1 port and the HV800's PCS1 port as labeled. You should hear a click when it's properly connected.

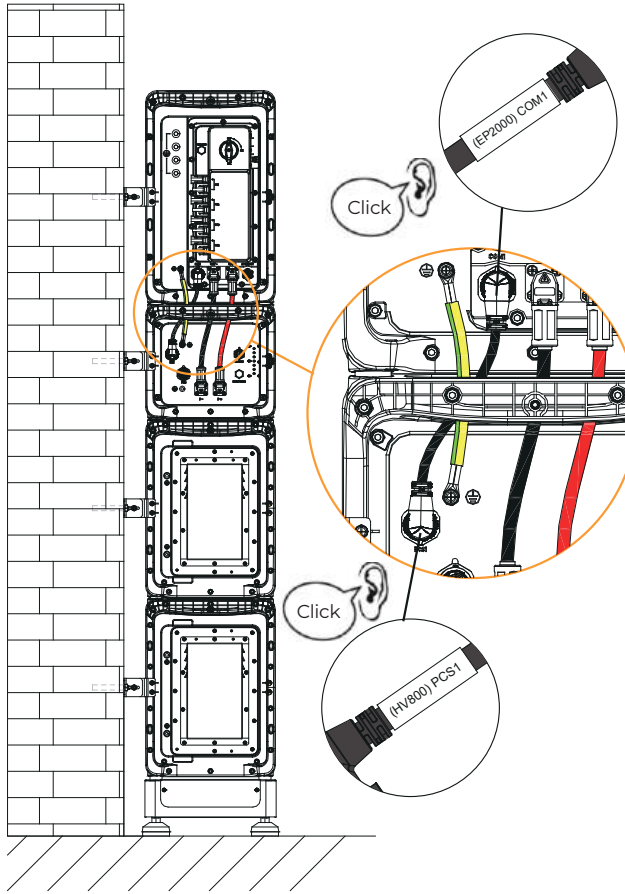

7.8 AC Power Cable

Step 1: Prepare the AC power cable.

Step 2: Insert the cable into the EP2000's AC OUTPUT port and the HV800's AC INPUT port. You should hear a click when it's properly connected.

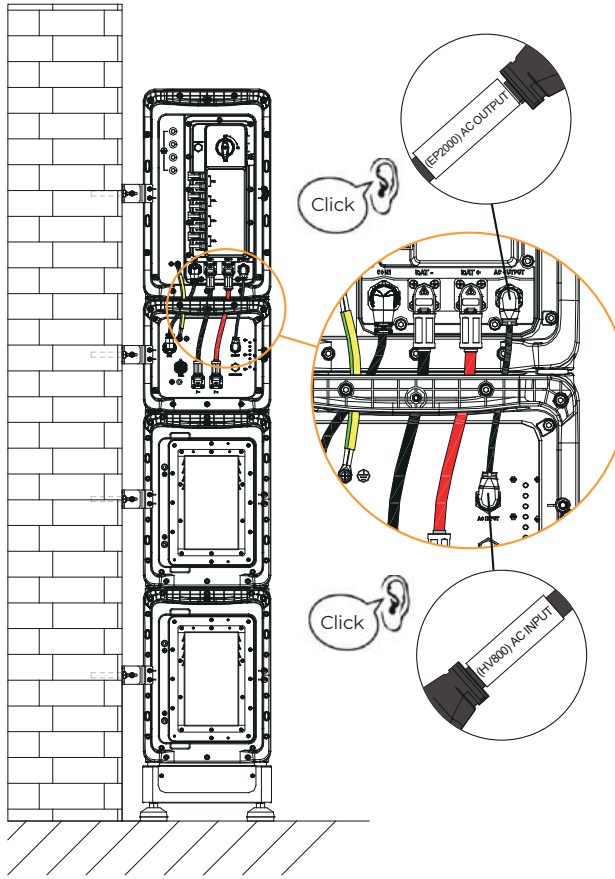

7.9 PV Cable

	Danger
	Do not connect the 4 PV inputs in parallel. Make sure that the PV1, PV2, PV3, and PV4 cables are properly connected without reversing their polarity.
	Attention
	Before removing the rubber plugs from the PV input positive and negative connectors, make sure the PV input switch on the inverter is “OFF”.

Step 1: Collect these items from the EP2000 kit: round terminal, PV+ input terminal parts, PV- input terminal parts, MC4 spanner, and M6*14 screws. Also, prepare PV cables (red for positive, black for negative) and a yellow-green cable for grounding (2.5-4mm^2).

Step 2: Use a cable stripper to remove insulation from the PV grounding cable to the right length. Insert the bare wire into the OT terminal and crimp them with a crimper.

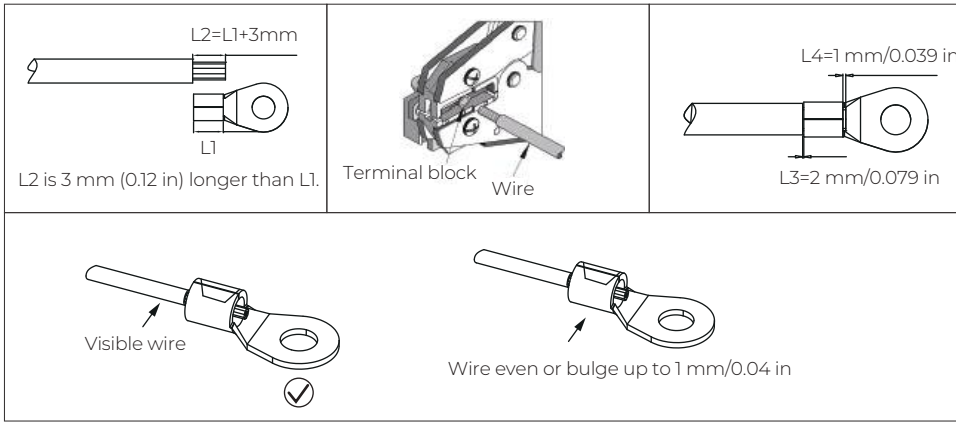

Step 3: Fix the OT terminal with M6*14 screws at the position shown in the figure below. Securely ground the other end of the cable in the favourite way.
Recommended torque: 2 Nm.

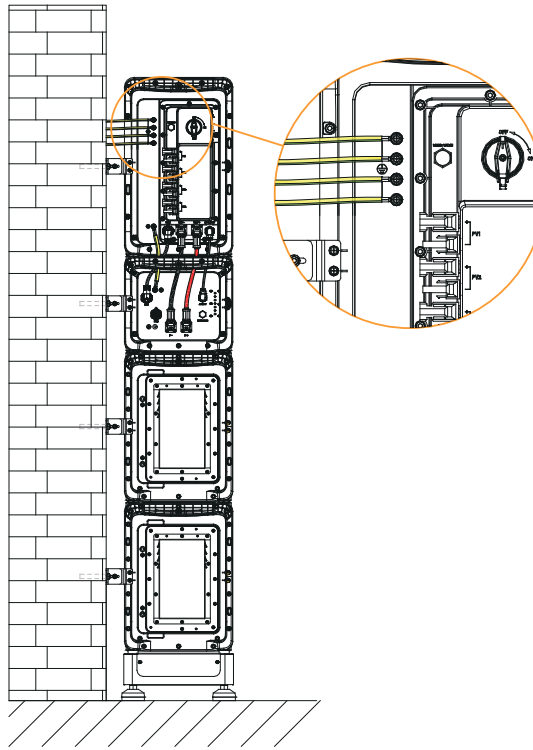

Step 4: Use a cable stripper to remove the insulation from the optional PV input cables to the right length.
Step 5: Insert the bare cables into the positive and negative metal terminals respectively. Use a crimper to securely crimp them in place.
Step 6: Insert the crimped positive and negative cables through the locking nuts and into the corresponding plastic housings. You'll hear a click when the metal cores are securely in place. Tighten the locking nuts to secure.
Step 7: Use a multimeter to confirm the positive and negative poles.
Step 8: Insert the positive and negative connectors into the EP2000's PV input ports.
Note: To detach the PV positive and negative connectors from the inverter, use the MC4 spanner. Insert the bayonet and press down firmly to release the connectors.

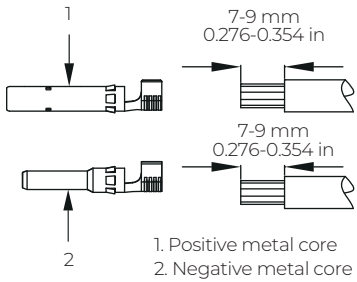
1
7-9 mm
0.276-0.354 in
7-9 mm
0.276-0.354 in
2
1. Positive metal core
2. Negative metal core

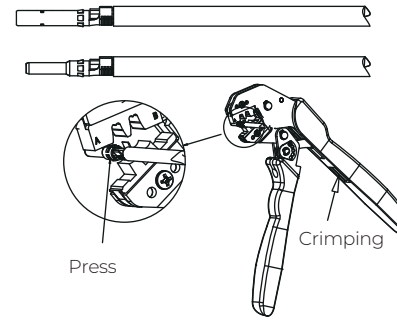
Press
Crimping

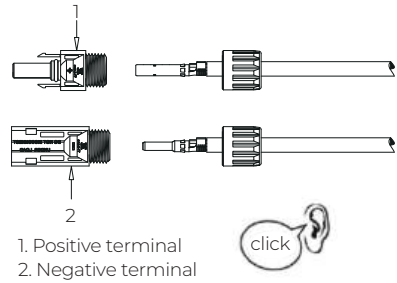
1
2
1. Positive terminal
2. Negative terminal
click

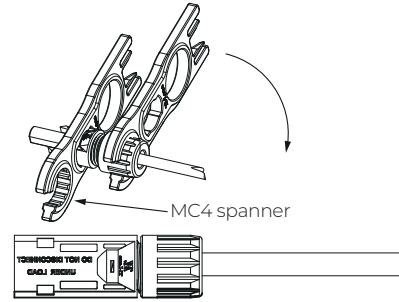
MC4 spanner

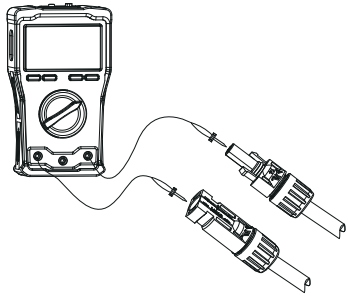

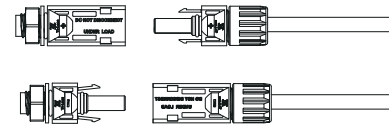

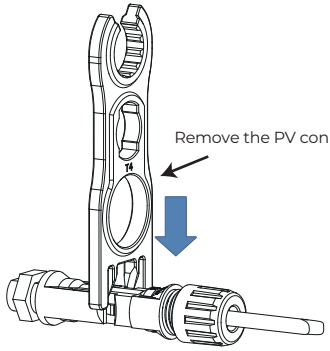
Remove the PV connector

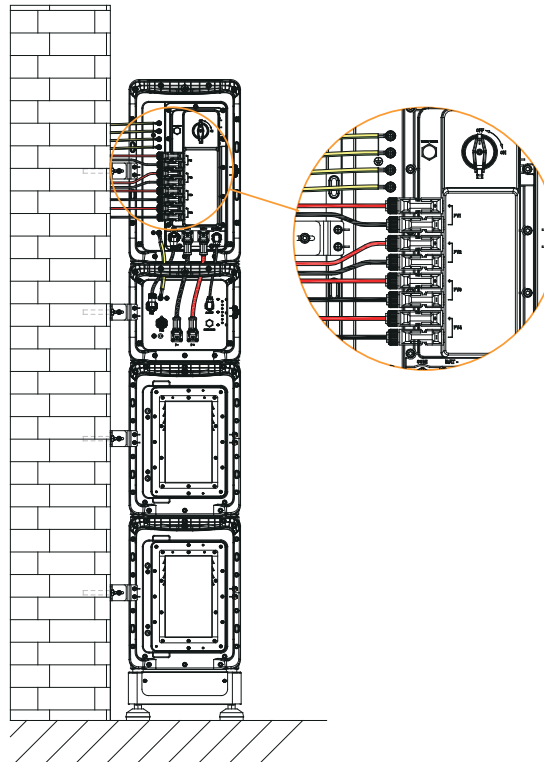

7.10 GRID and BACKUP Cables

Step 1: Prepare outdoor five-core rigid cable (recommended 10mm^2): L1 in brown, L2 in black, L3 in gray, Neutral (N) in blue, and Protective Earth (PE) in yellow-green.

Step 2: Verify the phase markings on the AC side cover. Use a cross-head screwdriver to remove the cover. Use an H3 hex screwdriver to loosen the 10 locking screws without removing them completely.

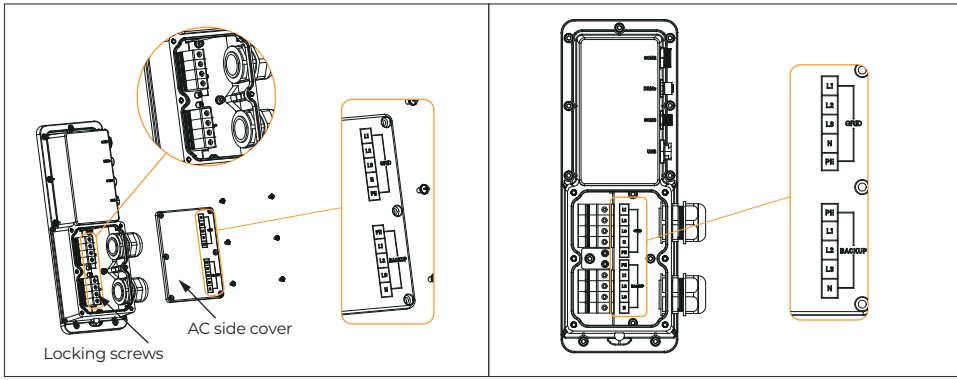

Step 3: Cut 10 cables to the appropriate length, and use wire strippers to strip the insulation layer of the cables to the appropriate length. The stripping length S1 = 12.5~13.5mm. It is recommended that S3 = S2+6mm (S3 is the exposed length of the PE line, and S2 is the exposed length of the L1/L2/L3/N line.

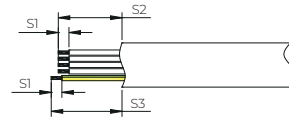

Step 4: Unscrew the nuts of the two PG waterproof connectors, remove the hole plugs, and put the nuts back to their original positions. Then pass the GRID cable and BACKUP cable through the PG waterproof connectors.

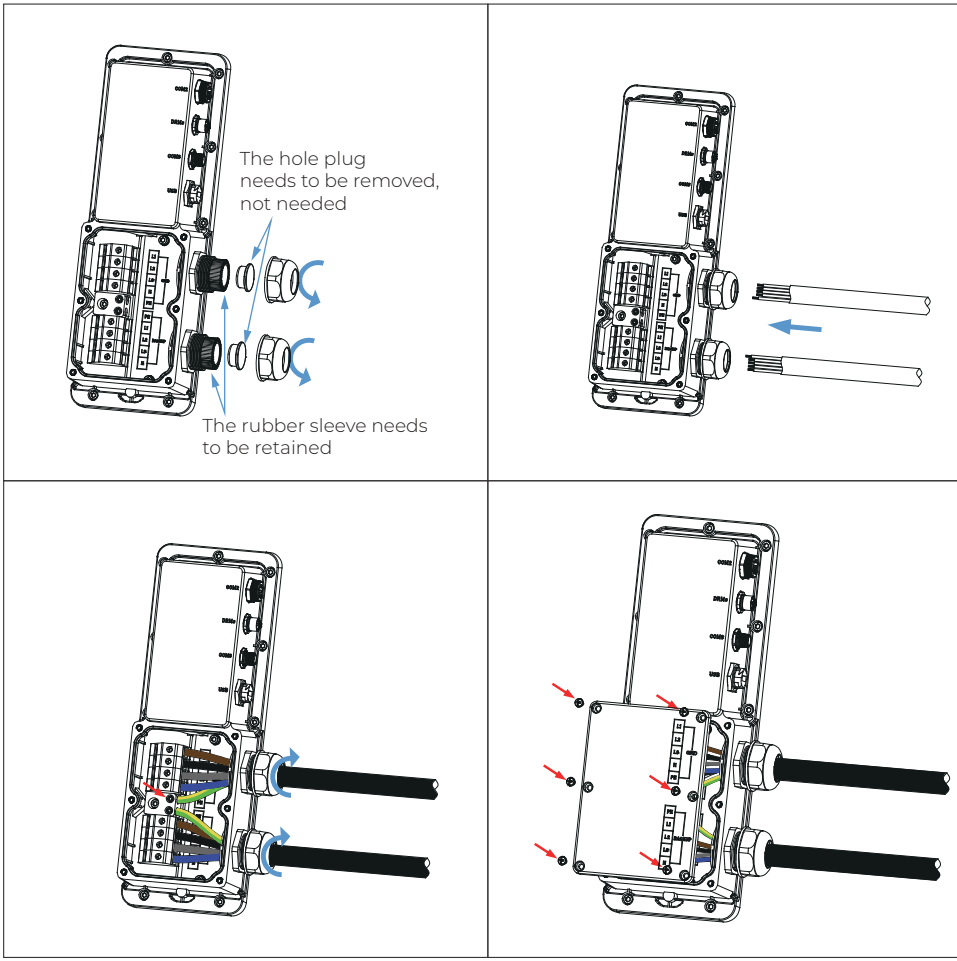

Step 5: Use an H3 hexagonal screwdriver to tighten the locking screw to ensure that the cable head is compressed. The screw torque is 1.8~2Nm, and then tighten the nut of the PG waterproof connector. Recommended torque: 2 Nm.

Step 6: Use a cross screwdriver to install the AC side sealing cover. The screw torque is 1Nm.

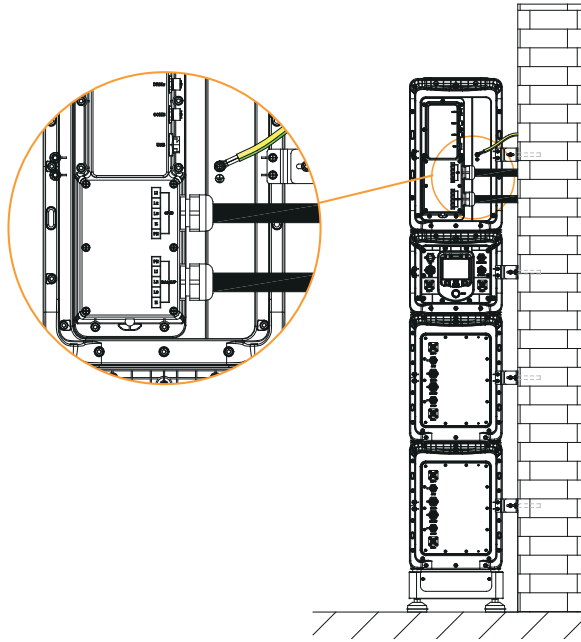

7. 1 1 Connect COM2/DRMs/COM3 cable

Step 1: Material preparation, select the accessories " M12 male plug , M12 female plug, COM2 network cable " in the EP2000 packing list , and bring your own multi-core cables, 8-core and 6-core are recommended .

Step 2 : Select the " M12 male plug " to make the DRMs cable , first remove the tail shell of the plug by rotating it

Step 3 : Pass your own cable through the tail shell, use wire strippers to strip the insulation layer of the cable to an appropriate length , and use a small Phillips screwdriver to complete the cable wiring according to the pin definition .

Step 4 : Align the positioning mark of the tail shell with the positioning groove on the seat, then assemble and tighten, and finally tighten the cable with the nut at the tail .

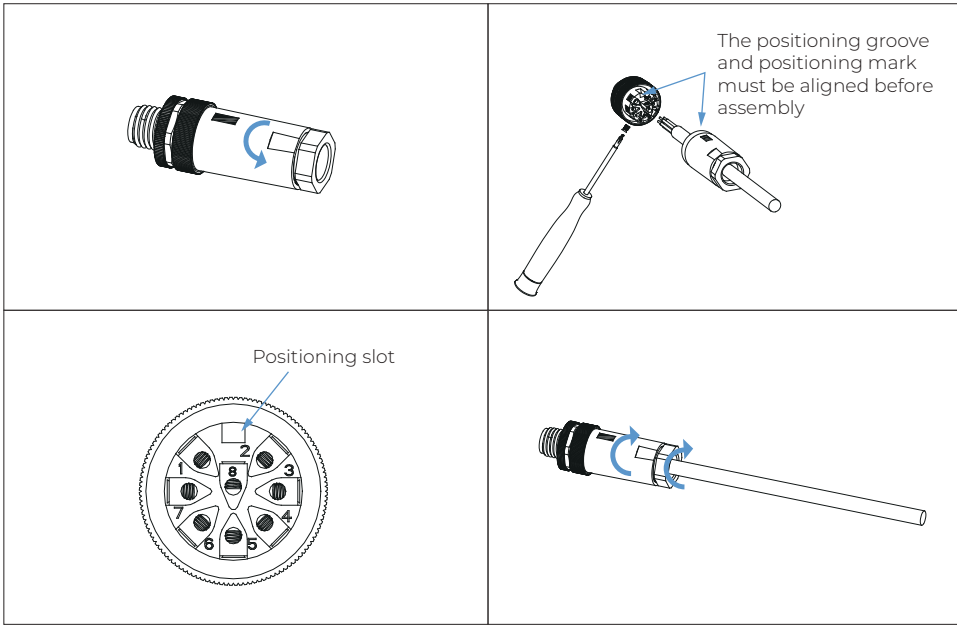

Step 5 : Select " M12 female plug " to make COM3 cable. The steps can refer to the production method of DRMs cable , but pay attention to the difference in pin definition between the two .

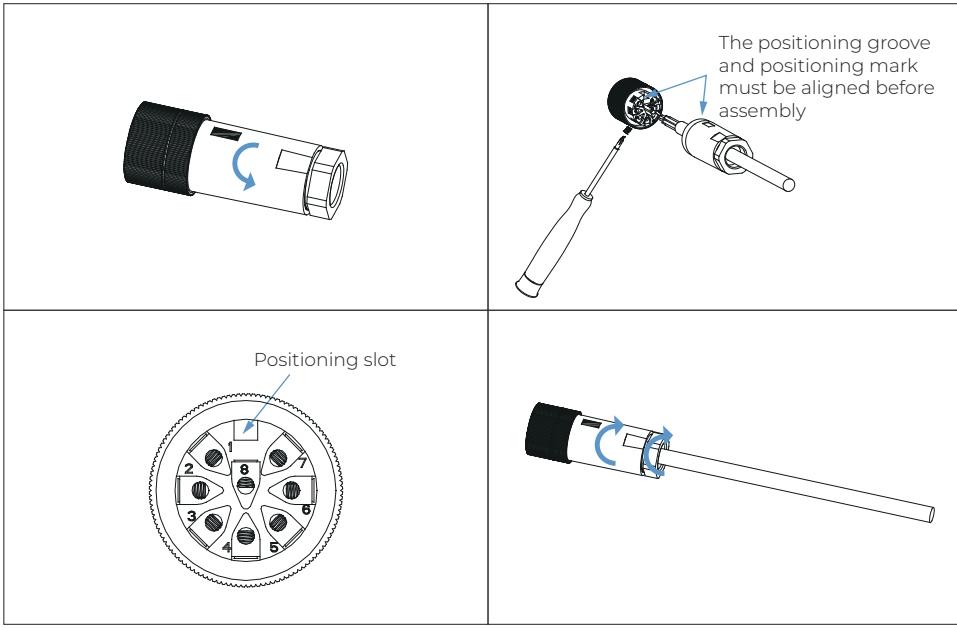

Step 6 : Connect the "COM2 network cable, DRMs cable, and COM3 cable" to the corresponding interface of EP2000, and connect the other end of the network cable to EMS. When plugging in the M12 plug, in order to match the socket positioning slot, the positioning mark needs to face the operator. In addition, users can prepare their own network cables, and then use the RJ45 connector in the accessories to crimp the required network cables.

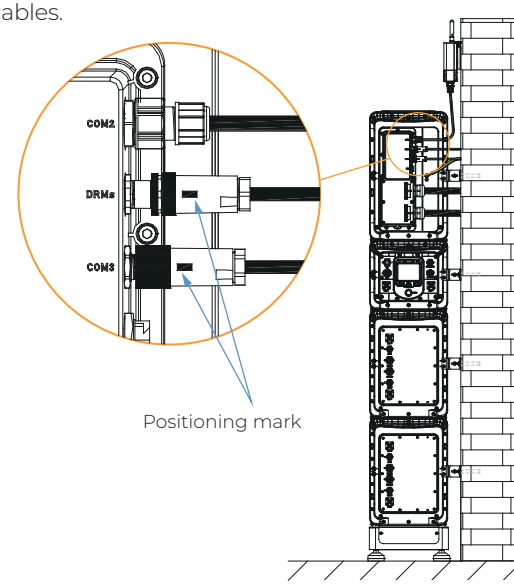

7.12 Other Ports

7.12.1 USB

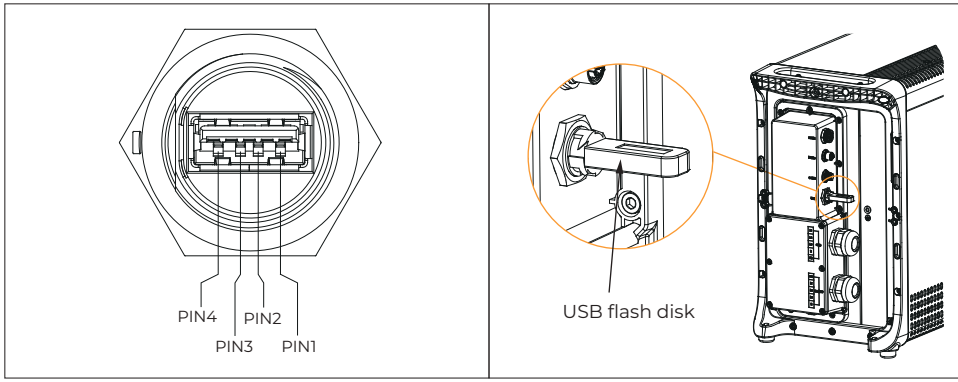

The port is used for EP2000 inverter firmware upgrade.

The USB flash disk should be formatted as FAT32 with no more than 32GB in size.

PIN	Category	Description	Note
1	INS_5V	5 Vdc	USB flash disk power
2	D-	USB differential signal-	Connect to USB flash disk
3	D+	USB differential signal+	Connect to USB flash disk
4	INS_GND	5 Vdc reference ground	Reference ground for USB flash disk power

Warning

Operation by professional personnel.
For USB flash disk access only, not for USB charging.

7.12.2 DRMs Logic and Dry Node Ports

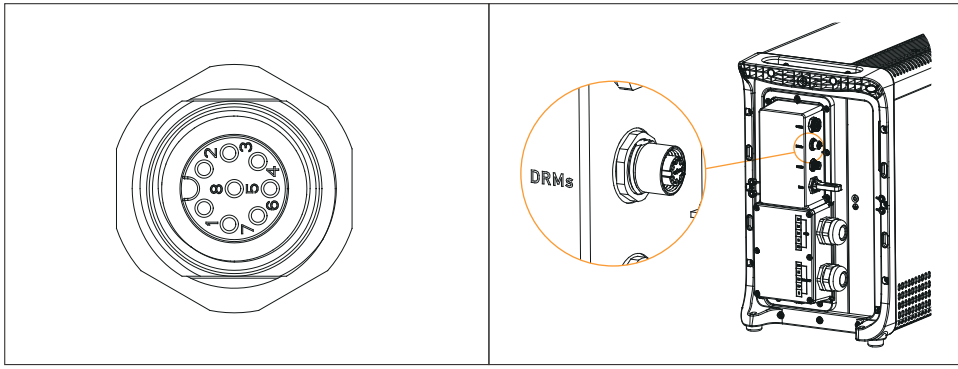

The inverter supports DRM0

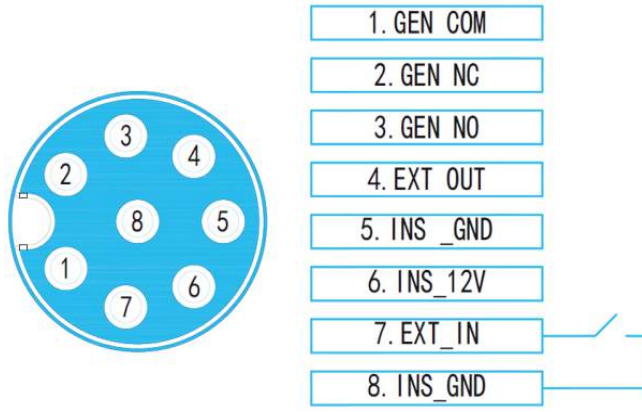

Connector	Category	Definition	Specifications
1	GEN COM	SPDT relay common terminal	External DC input limit: 30 Vdc/3 A (for generator input)
2	GEN NC	SPDT relay NC terminal	
3	GEN NO	SPDT relay NO terminal	
4	EXT OUT	External output I/O	Signal output
5	INS _GND	Reference ground	I/O reference ground for both 12 Vdc output and DRM0 input
6	INS_12V	12 Vdc output	12 V output
7	EXT_IN	DRM0 input	Signal input
8	INS_GND	Reference ground	I/O reference ground for both 12 Vdc output and DRM0 input

7.12.3 COM1 Port

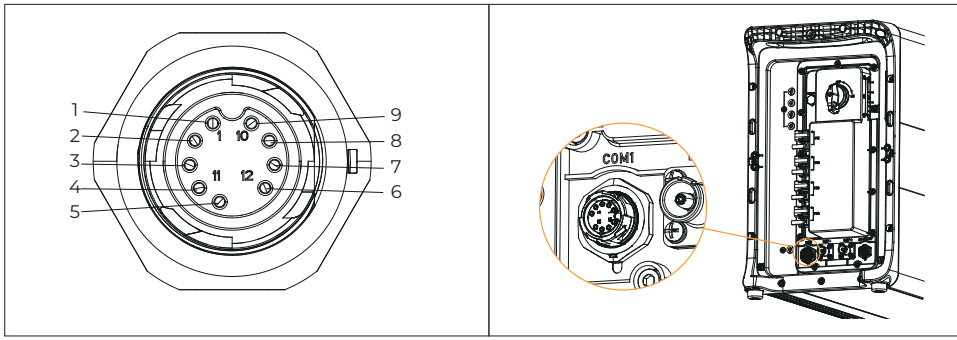

Interface		Function	Note
COM1		9-pin interface, for communication between the EP2000 inverter and the HV800.	See the diagram above for details.
Connector	**Category**	**Description**	**Wiring**
1	INS_GND	12 Vdc reference ground	Refer to Chapter 7.1 for details
2	INS_12V	For battery activation and powering the EMS controller with 12 Vdc output	
3	/	/	
4	CANH	For communication with EMS controller and BMS	
5	CANL		
6	PCS_CANH	For parallel connection of inverter units	
7	PCS_CANL		
8	PCS_485A+		
9	PCS_485B-		

7.12.4 COM2 Port

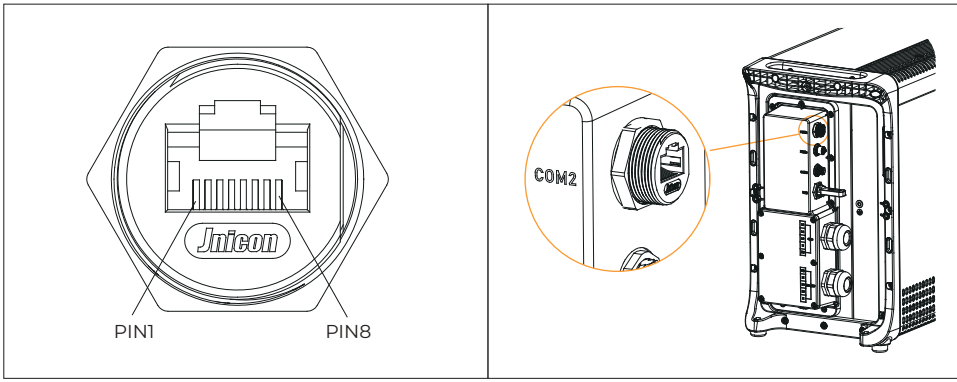

Interface		Function	Note
COM2		RJ45 port, for communication between the PCS to the EMS controller.	See the diagram above for details.
Connector	**Category**	**Description**	**Wiring**
1	INS_GND	12 Vdc reference ground	Refer to Chapter 7.1 for details.
2	INS_12V	For battery activation and powering the EMS controller with 12 Vdc output	
3	CANH	For communication with EMS controller and BMS	
4	CANL		
5	PCS_CANH	For parallel connection of inverter units	
6	PCS_CANL		
7	PCS_485A+		
8	PCS_485B-		

Attention

Do not connect Ethernet cables or other device cables to avoid damage to the equipment.

7.12.5 COM3 Port

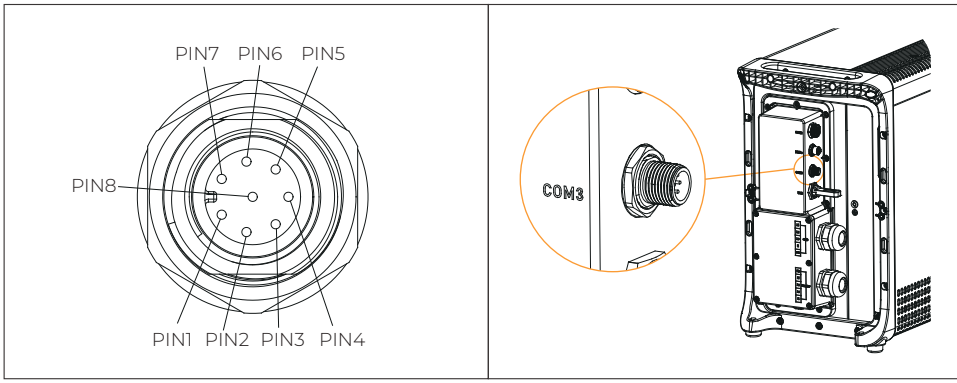

Connector	Category	Description	Wiring
1	INS_12V	12 Vdc	/
2	INS_GND	12 Vdc reference ground	/
3	485_A3+	RS485 differential signal A3+	Connect to RS485 differential signal A+
4	485_B3-	RS485 differential signal B3-	Connect to RS485 differential signal B-
5	485_A5+	RS485 differential signal A5+	Connect to RS485 differential signal A+
6	485_B5-	RS485 differential signal B5-	Connect to RS485 differential signal B-
7	/	/	/
8	/	/	/

7.12.6 AC OUTPUT Port

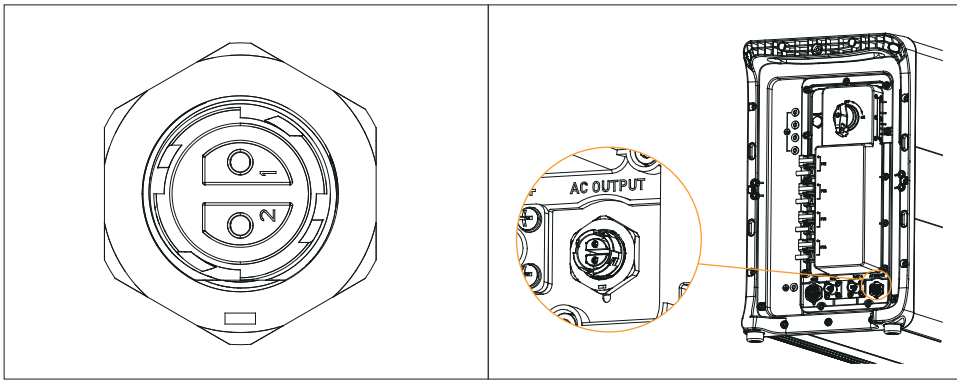

Connector	Category	Description	Wiring
1	OUT_L	Inverter AC output - Live	To AC INPUT port on the HV800 battery controller.
2	OUT_N	Inverter AC output - Neutral	

7.12.7 Meter and System Electrical Schematic

Instruction

- Refer to the Quick Installation Guide for electrical schematic details.
- Check the meter's manual for connection details.
- Connect 2 to 7 B700 battery packs in series.

Follow the diagram below for the correct CT direction - from the inverter to the grid.

Danger

- Before making any electrical connections, ensure all switches are set to "OFF" to prevent electric shock. When using the EP2000 inverter off-grid, relying solely on the main switch may not provide adequate protection against potential leakage currents. Therefore, it's essential to install a residual current device (RCD) before connecting backup loads.
- The EP2000 inverter features an integrated residual current monitoring unit. If this unit detects a leakage current above the set threshold, the inverter will quickly disconnect from the grid. Ensure any external AC switch with leakage protection used on the grid side can handle at least 100mA of leakage current.
- Each EP2000 inverter requires its own external AC switch. If multiple inverters are connected to the main RCD unit via separate AC switches, ensure the main RCD unit's leakage protection rating exceeds the number of EP2000 inverters multiplied by 100mA.

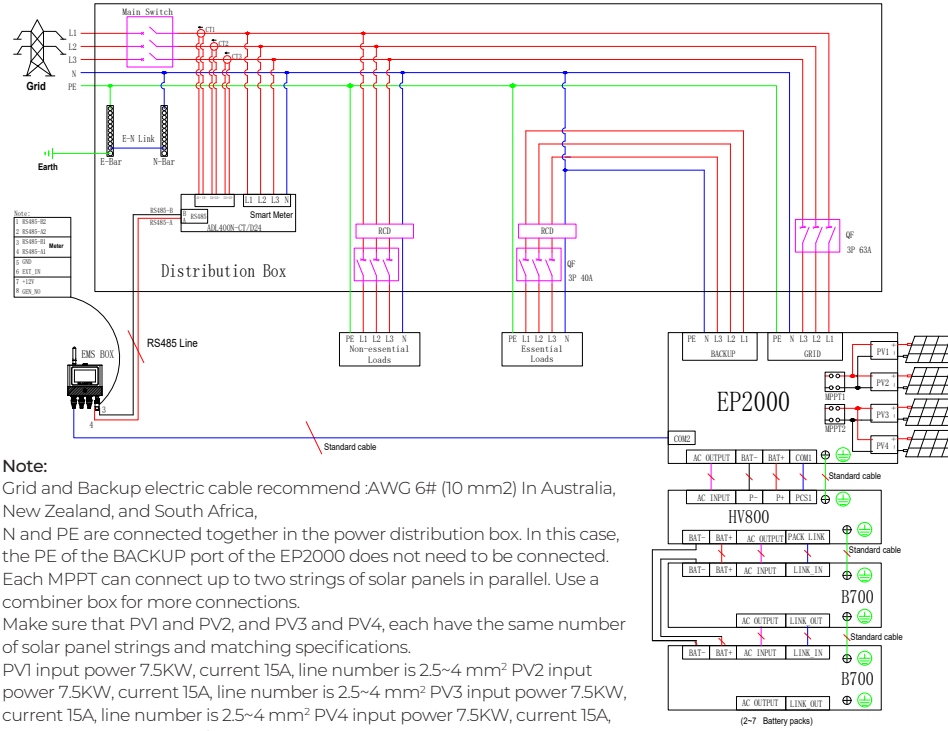

Note:

Grid and Backup electric cable recommend :AWG 6# (10 mm2) In Australia, New Zealand, and South Africa,

N and PE are connected together in the power distribution box. In this case, the PE of the BACKUP port of the EP2000 does not need to be connected.

Each MPPT can connect up to two strings of solar panels in parallel. Use a combiner box for more connections.

Make sure that PV1 and PV2, and PV3 and PV4, each have the same number of solar panel strings and matching specifications.

PV1 input power 7.5KW, current 15A, line number is 2.5~4 mm^2 PV2 input power 7.5KW, current 15A, line number is 2.5~4 mm^2 PV3 input power 7.5KW, current 15A, line number is 2.5~4 mm^2 PV4 input power 7.5KW, current 15A, line number is 2.5~4 mm^2

7.12.8 RCD

This inverter includes an integrated residual current device (RCD). If an external residual current device (RCD) is used, a device of type A should be used, with a tripping current of 300 mA or higher.

7.12.9 Earth Fault Alarm

The inverter has integrated a multiple-function dry-contact (Assembled in the DRM Port), which can be used for the external alarm for earth fault. The additional equipment required is a light indicator and/ or a buzzer. The external alarm needs to be powered by an external power supply less than 30V.

If an earth fault occurs:

·the DO dry-contact will switch on automatically to signal the external alarm;

·the buzzer inside the inverter will beep;

·the Ethernet communication port can be used for transmitting the alarm remotely to the APP.

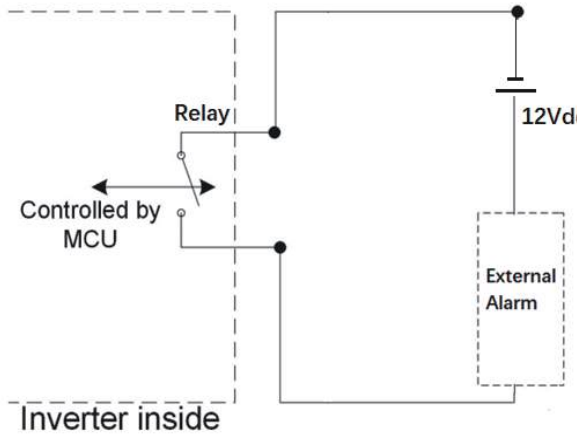

7.12.9.1 Earth fault Alarm installation

Install the external alarm as below. After installation the PV or battery insulation resistance fault will trigger the relay to signal the external alarm.

The alarm shall be installed in a place where the system owner will be aware of the alarm signal.

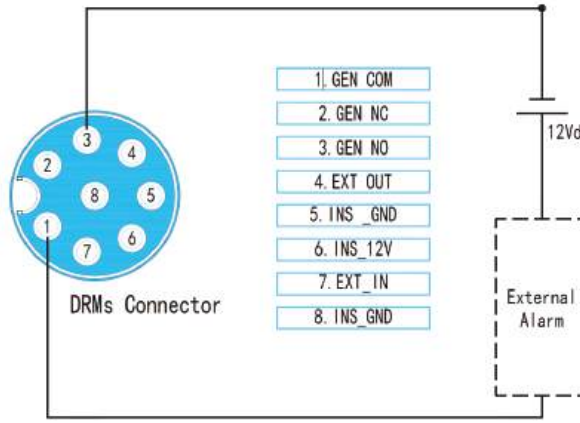

8. System Commissioning

8.1 Preliminary Check

Before powering up the EP2000 ESS, double check:

- All system components are installed properly.
- The EP2000 inverter's PV+ / PV- and BAT+ / BAT- cables are connected with proper polarity and voltage.

- The B5000 BESS's P+ / P- and BAT+ / BAT- cables are connected with proper polarity and voltage.
- All communication cables are securely in place.
- All AC and DC circuit breakers are switched off.
- Circuit breakers used meet manual requirements and local regulations.
- Grid and load cables are held firmly in place.
- Safety signs and warning labels are firmly attached and clearly visible.

8.2 Power on

Step 1: Switch on the PV input switch on the EP2000 inverter.
Step 2: Switch the circuit breaker on the HV800 to "ON". Press and hold the power button on the HV800 till the indicator on the button lights up green.
Step 3: Wait about 40 seconds for the inverter indicator to stay steady green.
Step 4: Switch on the AC circuit breakers for the inverter's GRID block.
Step 5: Turn on "System Switch" in the BLUETTI app. For details, please refer to the *BLUETTI App User Manual*.
Step 6: Check the output voltage of the BACKUP block.
Step 7: Switch on the AC circuit breakers for the inverter's BACKUP block.
Step 8: Monitor EP2000 system status using the BLUETTI app.

8.3 OTA Update

For details, please refer to "Firmware Upgrade" in the *EP2000 Energy Storage System BLUETTI App User Manual*.

8.4 Power off

Warning

After powering off the EP2000, residual voltage may still be present, which can cause electric shock or burns. Please wait at least 30 minutes and wear protective gloves before handling the system.

Step 1: Turn off the "System Switch" on the BLUETTI app.
Step 2: Switch off the AC circuit breakers for the inverter's GRID and BACKUP blocks.
Step 3: Switch off the PV input switch on the inverter.
Step 4: Press the power button on the HV800 till the indicator on the button flashes green.
Step 5: The indicator continues to flash.
Step 6: When the indicator is off, the B5000 BESS turns off.
Step 7: Switch the circuit breaker on the HV800 to "OFF" and the system powers off.

9. System Disposal

9.1 Remove the Inverter

To safely remove the EP2000 system, follow these steps:

Step 1: Power off the system.

Step 2: Unplug all cables connected to the inverter, including communication cables, PV input cables, power cables, AC output cables, and grounding cables.

Step 3: Remove the brackets and make sure that the inverter does not fall or tilt.

Step 4: Remove the inverter.

9.2 Recycle the Inverter

When the inverter reaches the end of its lifespan, it must be safely and carefully disposed of by the provisions of local laws and regulations.

9.3 Recycle the Battery Pack

When the battery pack reaches the end of its lifespan, it must be safely and carefully disposed of by the provisions of local laws and regulations.

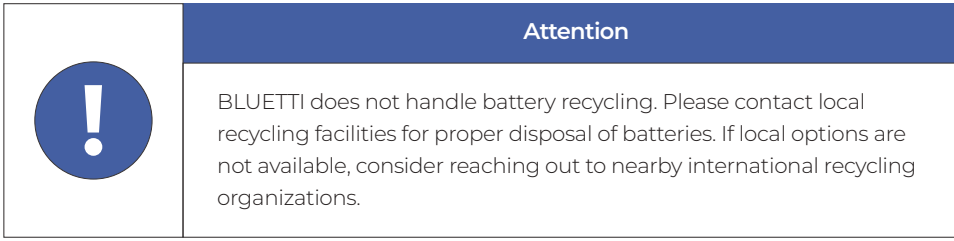

A disposal process for reference:

1. Contact the nearest battery recycling organization.
2. The organization assesses the costs of recycling.
3. Recycling methods include:

- On-site recycling: The organization collects lithium batteries on-site; costs vary based on distance and transportation.
- Centralized recycling: Gather all lithium batteries at one location for the organization to manage.

Note: You are responsible for transportation expenses.

4. Recycled lithium batteries are handled by the organization.

10. Troubleshooting

10.1 EP2000 Inverter

No.	Error Description	Solution
B001	BUS Overvoltage	Power off the system, wait 30 minutes, then restart. If the issue persists, please contact BLUETTI support.
B002	/	/
B003	BUS Undervoltage	Power off the system, wait 30 minutes, then restart. If the issue persists, please contact BLUETTI support.
B004-B007	/	/
B008	Hardware Inverter Overcurrent	Check the AC side connections (GRID and BACKUP blocks). If connections are correct, power off the system, wait 30 minutes, then restart. If the issue persists, please contact BLUETTI support.
B009-B011	/	/
B012	Overcurrent in Balance Circuit	Power off the system, wait 30 minutes, then restart. If the issue persists, please contact BLUETTI support.
B013	Auxiliary Power Undervoltage	
B014	DC Component Exception	
B015	Relay Failure	
B016	PV Connection Error	
B017	PV1 Overcurrent	
B018	PV2 Overcurrent	
B019	/	/
B020	PV1 Voltage High	Check if the solar system's open-circuit voltage exceeds the specific limit. Adjust the number of solar panels in series. The system resumes operation after calibration.
B021	PV2 Voltage High	
B022	/	/
B023	PV ISO Failure	Check insulation resistance between solar system and ground. Repair promptly if a short circuit is detected.
B024-B025	/	/
B026	Hardware PV1 Failure	Power off the system, wait 30 minutes, then restart. If the issue persists, please contact BLUETTI support.
B027	Hardware PV2 Failure	

No.	Error Description	Solution
B028	/	/
B029	GFCI Hardware Circuit Failure	Please contact BLUETTI support for assistance.
B030	GFCI Failure	Check if the AC side connections (GRID and BACKUP blocks) meet the installation requirements. Inspect for abnormalities such as leaks or damaged insulation.
B031	Phase Sequence Failure	Check the AC side connections (GRID and BACKUP blocks). If connections are correct, power off the system, wait 30 minutes, then restart. If the issue persists, please contact BLUETTI support.
B032	Fan Failure	Power off the system, wait 30 minutes, then restart. If the issue persists, please contact BLUETTI support.
B033	Zero Drift Abnormal	
B034	Hardware Input Overcurrent	
B035	DC Input Voltage Low	Check if the battery configuration meets system requirements (2-7 packs required). Ensure the system isn't discharging without grid or solar input. If neither condition applies, please contact BLUETTI support.
B036	DC Input Voltage High	If the battery packs are installed correctly, please contact BLUETTI support.
B037	DC Input Overcurrent	Power off the system, wait 30 minutes, then restart. If the issue persists, please contact BLUETTI support.
B038-B039	/	/
B040	L1 Inverter Overload	Check if the power rating and load type on the BACKUP block meet specific requirements. If so, power off the system, wait 30 minutes, then restart. If the issue persists, please contact BLUETTI support.
B041	L2 Inverter Overload	
B042	L3 Inverter Overload	
B043	L1 Inverter Output Failure	
B044	L2 Inverter Output Failure	
B045	L3 Inverter Output Failure	
B046	Overtemperature Protection	Please contact BLUETTI support for assistance.
B047	Communication Failure	Power off the system, wait 30 minutes, then restart. If the issue persists, please contact BLUETTI support.

No.	Error Description	Solution
B048	/	/
B049	DSP Communication Interrupted	Power off the system, wait 30 minutes, then restart. If the issue persists, please contact BLUETTI support.
B050	BMS Communication Interrupted	Check the external communication connections. If properly connected, restart the system. If the issue persists, please contact BLUETTI support.
B051	IoT (EMS) Communication Interrupted	
B052	Zero Drift Abnormal-ARM	Power off the system, wait 30 minutes, then restart. If the issue persists, please contact BLUETTI support.
B053	RTC Read/Write Exception	
B054	/	/
B055	Ambient Environment Abnormal	Make sure to use the system within a specified temperature range. If not, move the system to a suitable environment. If the issue persists after a restart, please contact BLUETTI support.
B056	Temperature 1 Abnormal	
B057	Temperature 2 Abnormal	
B058	Temperature 3 Abnormal	
B059	Temperature 4 Abnormal	
B060	BMS Charge Protection	Check if the system discharges without grid or solar charging. If not, please contact BLUETTI support.
B061	BMS Discharge Protection	
B062	BMS System Failure	
B063	Parallel Operation Abnormal (inverter)	Ensure the parallel communication cables are securely connected. Restart the equipment. If the issue persists, please contact BLUETTI support.
B064	/	/
B065	PV Input Voltage Too High	Check if the solar system's open-circuit voltage exceeds the specific limit. Adjust the number of solar panels in series. The system resumes operation after calibration.
B066	/	/
B067	BUS Soft Start Abnormal	Power off the system, wait 30 minutes, then restart. If the issue persists, please contact BLUETTI support.
B068-B096	/	/

No.	Error Description	Solution
B097	Grid Voltage High	· If it occurs occasionally, the grid may go through abnormal working conditions. The inverter recovers after the grid resumes. · If it occurs many times, check if the grid voltage and frequency support the inverter input specifications. If so, check the inverter AC circuit breaker and wiring. · If the voltage and frequency are beyond the range, please contact BLUETTI support.
B098	Grid Voltage Low	
B099	Grid Frequency High	
B100	Grid Frequency Low	
B101	Grid Oscillation	
B102	Grid Loss	
B103	PV1 Voltage Low	Check for issues in the PV configuration. If no problems are found, confirm if poor weather conditions are affecting performance. If neither applies, please contact BLUETTI support.
B104	PV2 Voltage Low	
B105-B108	/	/
B109	Grid Re-connection Abnormal	· If it occurs occasionally, the grid may go through abnormal working conditions. The inverter recovers after the grid resumes. · If it occurs many times, check if the grid voltage and frequency support the inverter input specifications. If so, check the inverter AC circuit breaker and wiring. · If the voltage and frequency are beyond the range, please contact BLUETTI support.
B110-B128	/	/
B129	EEPROM Read/Write Abnormal	Power off the system, wait 30 minutes, then restart. If the issue persists, please contact BLUETTI support.
B130-B133	/	/
B134	USB Flash Disk Format Error	Use the USB flash disk formatted as FAT32 with no more than 32GB in size. Check if the upgrade files exist or expire. If they do not exist or have expired, please contact BLUETTI support to get the latest versions.
B135	USB Flash Disk Upgrade Abnormal	Restart the inverter. If the issue persists, please contact BLUETTI support.
B136	/	/
B137	USB Flash Disk Communication Abnormal	Restart the inverter. If the issue persists, please contact BLUETTI support.

No.	Error Description	Solution
B138	No Upgrade File in USB Flash Disk	No upgrade files found on the USB flash disk. Please contact BLUETTI support for the latest firmware.
B139	/	/
B140	AC PV Meter Communication Abnormal	Check communication and power supply wiring of the meter used for AC coupling.
B141-B142	/	/
B143	Data Erasure	The equipment is performing data erasure. The alert will disappear once completed.
B144-B148	/	/
B149	Grid Meter Communication Abnormal	Check communication and power supply wiring of the meter used for anti-backflow function.
B150	Battery Charging Prohibited	This is a reminder for the system's charge /discharge capability.
B151	Battery Discharging Prohibited	

10.2 B700 Battery

No.	Error Description	Solution
P001	Overvoltage	Restart the system. If the issue persists, please contact BLUETTI support.
P002	Charging Overtemperature	Stop using and wait for the battery to cool down.
P003	Single Cell Overvoltage	Restart the system. If the issue persists, please contact BLUETTI support.
P004	Charging Temperature Low	Connect to the grid and activate battery heating.
P005	Discharging Overtemperature	Stop using and wait for the battery to cool down.
P006	Undervoltage	Charge the battery promptly.
P007	Discharging Undertemperature	Stop using and move the battery to a warm place.
P008	Single Cell Undervoltage	Charge the battery promptly.
P009	Low SoC	
P010-P016	/	/
P017	Overvoltage Protection	Restart the system. If the issue persists, please contact BLUETTI support.
P018	/	/
P019	Battery Cluster Charging Overcurrent Protection 1	Restart the system. If the issue persists, please contact BLUETTI support.
P020	Battery Cluster Charging Overcurrent Protection 2	
P021	Battery Cluster Charging Overcurrent Protection 3	
P022	Charging Overtemperature Protection	Stop using and wait for the battery to cool down.
P023	Charging Undertemperature Protection	Connect to the grid and activate battery heating.
P024	Single Cell Overvoltage Protection	Restart the system. If the issue persists, please contact BLUETTI support.
P025	High Charge Protection	
P026-P032	/	/
P033	Undervoltage Protection	Charge the battery promptly.

No.	Error Description	Solution
P034	/	/
P035	Battery Cluster Discharging Overcurrent Protection 1	Restart the system. If the issue persists, please contact BLUETTI support.
P036	Battery Cluster Discharging Overcurrent Protection 2	
P037	Battery Cluster Discharging Overcurrent Protection 3	
P038	Discharging Overtemperature Protection	Stop using and wait for the battery to cool down.
P039	Discharging Undertemperature Protection	Stop using and move the battery to a warm place.
P040	Single Cell Undervoltage Protection	Charge the battery promptly.
P041-P048	/	/
P049	Single Cell Voltage Difference Fault	Restart the system. If the issue persists, please contact BLUETTI support.
P050	Battery Temperature Difference Fault	
P051	Single Cell Failure	
P052	Low Temperature	Stop using and move the battery to a warm place.
P053	Battery Cluster Short Circuit	Stop using it and contact BLUETTI support.
P054	Insulation Leakage	
P055	Main Relay Sticking	Restart the system. If the issue persists, please contact BLUETTI support.
P056	Main Relay Open Circuit	
P057	Pre-charge Failure 1	
P058	Power-off Failure	Stop using it and contact BLUETTI support.
P059	Fuse Open Circuit	Restart the system. If the issue persists, please contact BLUETTI support.
P060	Relay Drive Short Circuit	
P061	High Voltage Interlock Abnormal	
P062	BMU Communication Fault	
P063	Power Cable Disconnected	Ensure the power cable is connected correctly and securely. If the issue persists, please contact BLUETTI support.
P064	Balancing MOS Failure	Restart the system. If the issue persists, please contact BLUETTI support.
P065	Balancing Failure	

No.	Error Description	Solution
P066	BMU Power Supply Abnormal	Restart the system. If the issue persists, please contact BLUETTI support.
P067	Address Abnormal	
P068	Parameter Initialization Abnormal	
P069	Safety Core Communication Fault	
P070	High Voltage Board Communication	
P071	Circuit Breaker Failure	
P072	Safety Core Trip	
P073	Reverse Connection	Ensure the power cable is connected correctly and securely. If the issue persists, please contact BLUETTI support.
P074	PCS Communication Abnormal	Ensure the communication cable between the B700 and the PCS is connected correctly and securely. If the issue persists, please contact BLUETTI support.
P075	BUS Voltage Calibration Error	Restart the system. If the issue persists, please contact BLUETTI support.
P076	System 5 V Power Module Failure	
P077	Heater Failure	
P078	Current Sampling Abnormal	
P079	Pre-charge Failure 2	
P080	Master-slave Communication Failure	
P081-P096	/	/

11. Specifications

11.1 EP2000 Inverter

PV Side		
Maximum PV Input Power	30 kW	
MPPT Operating Voltage Range	160 V to 850 V	
Rated PV Input Voltage	500 V	
Maximum PV Input Voltage	1.000 V	
PV start voltage	180V	
MPPT Voltage Range for Full Load	500 V to 800 V	
Number/Array of MPP Tracker	2/2	
Maximum PV Input Current	30 A/30 A	
Maximum PV Short-Circuit Current	40 A/40 A	
Maximum Inverter Backfeed Current to the Array	0,005 d.c. mA	

Battery Side		
Battery Chemistry	$LiFePO_4$	
Rated Charging/Discharging Power	21 kW	
Battery Voltage Range	160 V to 800 V	Input current decreases with battery voltage below 200 V.
Maximum Charging/Discharging Current	60 A	Actual current subject to BMS strategy.

On-Grid		
Rated Output Power	20 kVA	
Wiring	3L/N/PE	
Nominal AC Voltage	230/400 Vac	As per local grid connection requirements
Rated Grid Frequency	50 Hz	
Power Factor	0.8 overexcited to 0.8 underexcited adjustable	
THDi	<3% at rated power	
Maximum Apparent AC Input Power	40 kVA	Bypass + Charging
Maximum Input Current	60 a.c. A	
Rated Current	29 a.c. A	
Maximum Output Fault Current (Peak Duration)	131 a.c. A/100 us	
Output Inrush Current (Peak Duration)	830 a.c. A/75 us	
Maximum Output Overcurrent Protection	71 a.c. A	

Off-Grid		
Rated Power (@230 V, 50 Hz)	20 kVA	
Rated Current	29 a.c. A	
Nominal AC Voltage	230/400 Vac	3L/N/PE
Nominal Output Frequency	50 Hz	
THDv (Linear Load)	<3%	
Overload Capability	1.1 times rated power, 10 minutes; 1.5 times rated power, 10 seconds	
Switch Over Time to Backup Power	<10 ms	

Efficiency		
MPPT Efficiency	99.9%	
Max. Inverter Efficiency	98.0%	
European Efficiency	97.5%	

Certificates and Permits	
Grid Connections	Germany: VDE-AR-N 4105:2018, DIN VDE V0124-100:2020; Austria: TOR Erzeuger Type A version 1.2, 18 April 2022; Australia: AS/NZS 4777.2:2020 Amd 1:2021
Safety	IEC 62109-1, IEC 62109-2, EN 62109-1, EN 62109-2
Emissions	EN IEC 61000-6-3, EN IEC 61000-6-1
RoHS	2011/65/EU and (EU) 2015/863

General		
Max. Parallel Units	3	Grid-side + off-grid side parallel
Operation Temperature Range	-20°C to 60°C/-4°F to 140°F	Output decreases above 45°C/113°F
Relative Humidity	0 to 95%	
Operating Altitude	≤4.000 m/13,123 ft	Output decreases above 2.000 m/6,561.68 ft
Degree of Protection	IP65	
Cooling	Fan cooling	
Noise Emission (Typical)	≤50 dB	
Self-consumption (At Night)	<15 W	
PV Array Type	Ungrounded PV array	
Topology	Transformerless	
Inverter Technology	Non-isolated	
Off-Grid Output Type	Float ground	
Protection	GFCI, insulation resistance detection, anti-islanding protection, output overcurrent protection, short-circuit protection	
Protective Class	Class I	
Overvoltage Category	PV and Battery (II), AC (III)	
Weight	60 kg/132.3 lb	
Dimensions (W × H × D)	670 mm × 280 mm × 460 mm /26.38 in × 11.02 in × 18.11 in	
Warranty	10 years	

11.2 HV800 Battery Controller

Item	Rating	Note
Working Voltage	130 Vdc to 800 Vdc	
Output Switch	High-voltage contactor × 2	
Output Switch Position	1 each for positive and negative terminals	
Fuse	800 Vdc/150 A, fast blow	
Circuit Breaker	1.000 Vdc/80 A, Type B	
Output Connector	100 A/1.000 Vdc, aviation connector	
Dimensions (W × H × D)	659,8 mm × 279,8 mm × 248,8 mm /25.98 in × 11.02 in × 9.8 in	
Net Weight	19 kg/41.89 lbs	

11.3 B700 Battery

Item	Rating	Note
Battery Chemistry	$LiFePO_4$	Prismatic cell
Cell Capacity	72 Ah	
Battery Capacity	72 Ah	1P32S
Nominal Battery Voltage	102,4 V	3,2 V × 32
Nominal Battery Energy	7.372,8 Wh	Charging: 0.5C/3,6 V/0.05C (25°C/77°F) Discharging: 0.5C/2,5 V (25°C/77°F)
Usable Battery Energy	6.635,52 Wh	90% DoD Charging: 0.5C (25°C/77°F) Discharging: 0.5C (25°C/77°F)
Cell Overvoltage Protection	3,62 V	
Cell Undervoltage Protection	2,5 V	
Minimum Output Voltage	83,2 V	2,6 V × 32
Maximum Input Current	36 A	The continuous input current is affected by temperature and SoC.
Maximum Output Current	50 A	The continuous output current is affected by temperature and SoC.
Short-Circuit Protection	Yes	
Discharging Overtemperature Protection	61°C/141.8°F	
Discharging Overtemperature Recovery	55°C/131°F	
Discharging Low Temperature Protection	-22°C/-7.6°F	
Discharging Low Temperature Recovery	-20°C/-4°F	
Charging Overtemperature Protection	61°C/141.8°F	
Charging Overtemperature Recovery	55°C/131°F	
Charging Low Temperature Protection	-1°C/30.2°F	
Charging Low Temperature Recovery	1°C/33.8°F	

11.4 EP2000 ESS

No. of EP2000 Inverter	1					
No. of EMS Controller (SEC-G1)	1					
No. of HV800 Battery Controller	1					
No. of B700 Battery Pack	2	3	4	5	6	7
Total Capacity	14,7 kWh	22,1 kWh	29,49 kWh	36,86 kWh	44,2 kWh	51,6 kWh
Max. Output Power (no PV)	10,5 kW	15,5 kW	20 kW	20 kW	20 kW	20 kW
App Monitoring & Control	The EP2000 inverter offers versatile connectivity options for device and system monitoring, such as RS485, Ethernet, Bluetooth, WLAN, and CAN. These ports allow for flexible configuration of parameters to optimize performance. Access all inverter data conveniently through the BLUETTI App.					

Appendix

Scan the QR code below or search "BLUETTI" in the App Store or Google Play to download the BLUETTI app.

For more details, please refer to *EP2000 App User Manual*.

Need Help? We're here for you!

Customer Service(AU)

Email: au@bluetti.com

Address: Unit 15, 25 Gibbes Street Chatswood NSW 2067

@ BLUETTI Official

@ bluetti_australia

@ bluetti.au

@bluetti.inc

Visit Us

SHENZHEN POWEROAK NEWENER CO., LTD.

Address: F19, BLD No.1, Kaidaer, Tongsha Rd No.168, Xili Street, Nanshan, Shenzhen, China



Always Share Excellence